PK010R-N12AL-2UP8X-V1141
Pressure Sensor – 2 PNP Transistor Switching Outputs

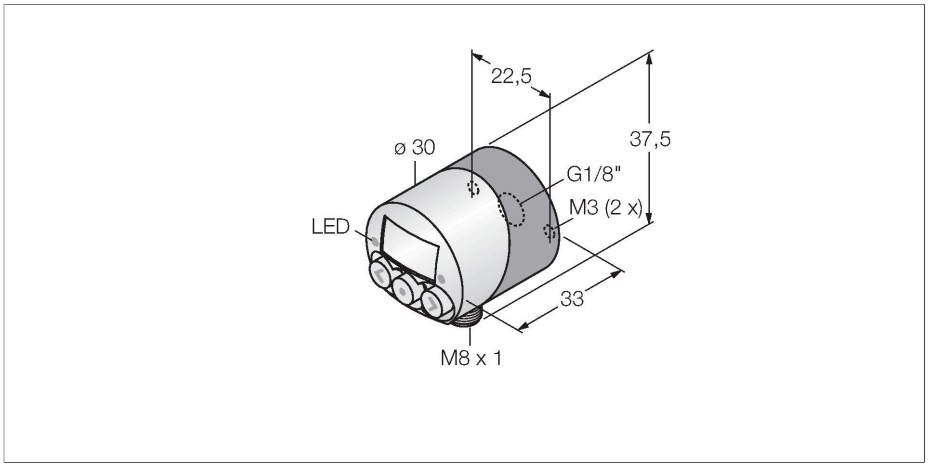

Features

- Compact design
- Pressure and vacuum monitoring
- Display rotatable by 180°
- Excellent EMC properties
- Pressure range 0…10 bar rel.

Wiring diagram

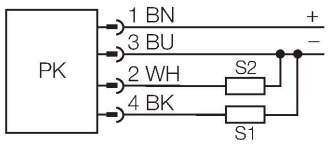

Technical data

Type	PK010R-N12AL-2UP8X-V1141
Ident. no.	6833010
Pressure range	
Relative pressure	0…10 bar rel.
	0…145.04 psi
	0…1 MPa
Admissible overpressure	≤ 16 bar
Response time	< 2.5 ms
Power supply	
Operating voltage	10.8…30 VDC
Short-circuit/reverse polarity protection	yes / yes
Protection type and class	IP65
Outputs	
Output 1	Switching output
Output 2	switching output
Switching output	
Output function	NO/NC, PNP
Accuracy	± 1 % of final value BSL
Rated operational current	0.3 A
Switching frequency	≤ 400 Hz
Switch point:	0…100%
Temperature behaviour	
Medium temperature	0…+50 °C

Functional principle

The pressure transmitters of the PK series operate with a silicon measuring cell. Through the pressure applied on the silicon, a pressure proportional signal is generated and electronically processed . The processed signal is made available as switching output. The sensors are intended only for use in non-aggressive gas and compressed air applications. With lubricated compressed air, the pressure connection should point downwards

PK010R-N12AL-2UP8X-V1141| 09/24/2020 01-06 | technical changes reserved

Technical data

Temperature coefficient zero point Tk0	± 0.15 % of full scale/10 K
Temperature coefficient span T_{kS}	± 0.15 % of full scale/10 K
Ambient conditions	
Ambient temperature	-10…+50 °C
Storage temperature	-20…+85 °C
Vibration resistance	10…55 Hz 1.5 mm, XYZ 2 h
Shock resistance	10 g (11 ms) , acc. to IEC 68-2-27
EMV	Emitted interference acc. to EN 61000 EN 61000-6-4* Intrinsically safe acc. to EN 61000-6-2* * shielded connection cable recommended
Housing	
Housing material	Aluminium, Al/PVC
Pressure transducer material	Silicon
Process connection	G 1/8" female thread
Wrench size pressure connection / coupling nut	SW 14
Electrical connection	Connector, M8 × 1
Reference conditions acc. to IEC 61298-1	
Temperature	15…+25 °C
Atmospheric pressure	860…1060 hPa abs.
Humidity	45…75 % rel.
Auxiliary power	24 VDC
Display	
Display	3-digit 7-segment display, rotatable by 180°
Switching state	2 × LEDs, Red/Green
Unit display	LEDs for display of output status report
Programming options	switch/release point, hysteresis/window mode, NO/NC, muting, peak pressure memory
MTTF	acc. to SN 29500 (Ed. 99) 40 °C

PK010R-N12AL-2UP8X-V1141| 09/24/2020 01-06 | technical changes reserved