PS010V-606-LI2UPN8X-H1141
Pressure Transmitter (Front-Flush) – With Analog Output and PNP/NPN Transistor Switching Output Output 2 Reprogrammable as Switching Output

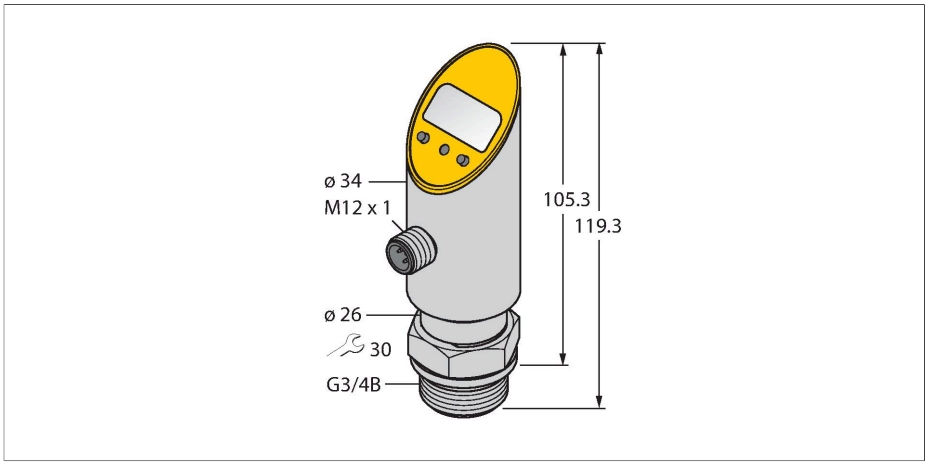

Features

- Front-flush mounted diaphragm
- Reading of adjusted values without tool
- Recessed pushbutton and keylock for secure programming
- Permanent indication of pressure (bar, psi, kPa, MPa…)
- Peak pressure memory
- Pressure range -1…10 bar rel.

Wiring diagram

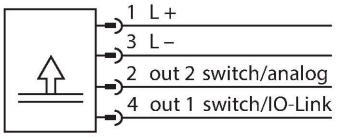

Technical data

Type	PS010V-606-LI2UPN8X-H1141
Ident. no.	6833042
Pressure range	
Relative pressure	-1…10 bar rel.
	-14.5…145.04 psi
	-0.1…1 MPa
Admissible overpressure	≤ 50 bar
Burst pressure	≥ 50 bar
Response time	< 3 ms
Power supply	
Operating voltage	18…30 VDC
Current consumption	≤ 50 mA
Voltage drop at I_e	≤ 2 V
Protective measure	SELV; PELV according to EN 50178
Short-circuit/reverse polarity protection	yes / yes
Protection type and class	IP67 / IP69K / III
Outputs	
Output 1	Switching output or IO-Link mode
Output 2	analog or switching output
Switching output	
Communication protocol	IO-Link

Functional principle

The pressure sensors of the PS series operate with piezo-resistive ceramic measuring cells. The ceramic diaphragm is unbalanced in proportion to the pressure applied. Depending on the sensor type, the voltage produced is made available either as switching or analog output signal. Non-rotatable and rotatable sensors, numerous thread types, front-flush or dead-zone free diaphragms and an accuracy of 0.5% of full scale guarantee highest flexibility and safe process interfacing.

PS010V-606-LI2UPN8X-H1141| 09/24/2020 01-07 | technical changes reserved

Technical data

Output function	NO/NC, PNP/NPN
Accuracy	± 0.5 % of final value BSL
Rated operational current	0.2 A
Switching frequency	≤ 180 Hz
Switching point distance	≥ 0.5 %
Switch point:	(min + 0.005 x range) up to 100% f.s.
Release point(s)	min up to (SP - 0.005 x range)
Switching cycles	≥ 100 mil.
Analog output	
Current output	4…20 mA
Voltage output	0…10 V
Load	≤ 0.5 kΩ
Accuracy LHR	± 0.5 % FS BSL
IO-Link	
IO-Link specification	V 1.0
Programming	FDT / DTM
Transmission physics	corresponds to 3-wire physics (PHY2)
Transmission rate	COM 2 / 38.4 kbps
Process data width	16 bit
Measured value information	14 bit
Switchpoint information	2 bit
Frame type	2.2
Accuracy	± 0.5 % of full scale BSL
Included in the SIDI GSDML	Yes
Temperature behaviour	
Medium temperature	-10…+85 °C
Temperature coefficient zero point Tk0	± 0.15 % of full scale/10 K
Temperature coefficient span T_{kS}	± 0.15 % of full scale/10 K
Ambient conditions	
Ambient temperature	-40…+80 °C
Storage temperature	-40…+80 °C
Vibration resistance	20 g (9…2000 Hz), according to IEC 68-2-6
Shock resistance	50 g (11 ms) , acc. to IEC 68-2-27
EMV	EN 61000-4-2 ESD:4 kV CD / 8 kV AD EN 61000-4-3 HF radiated: 15 V/m EN 61000-4-4 Burst: 2 kV EN 61000-4-5 Surge: 1000 V, 42 Ohm EN 61000-4-6 HF cable bound: 10 V

PS010V-606-LI2UPN8X-H1141| 09/24/2020 01-07 | technical changes reserved

Technical data

Housing	
Housing material	Stainless-steel/Plastic, 1.4305 (AISI 303)
Pressure connection material	Stainless steel 1.4435 (AISI 316L)
Sealing material	FPM spez.
Process connection	G 3/4" front-flush
Wrench size pressure connection / coupling nut	30
Electrical connection	Connector, M12 × 1
Max. tightening torque housing nut	25 Nm
Reference conditions acc. to IEC 61298-1	
Temperature	15…+25 °C
Atmospheric pressure	860…1060 hPa abs.
Humidity	45…75 % rel.
Auxiliary power	24 VDC
Display	4-digit 7-segment display, rotatable by 180°, disengageable
Switching state	2 × LEDs, Yellow
Unit display	5 x LEDs green (bar, psi, kPa, MPa, misc)
Programming options	start/end value analog output; switch/ release points; PNP/NPN; NO/NC contact; hysteresis/window mode; damping; pressure unit; peak pressure memory
MTTF	439 years acc. to SN 29500 (Ed. 99) 40 °C

PS010V-606-LI2UPN8X-H1141| 09/24/2020 01-07 | technical changes reserved