PS010A-501-2UPN8X-H1141/3GD
Pressure Transmitter (Rotatable) – 2 PNP/NPN Transistor Switching Outputs

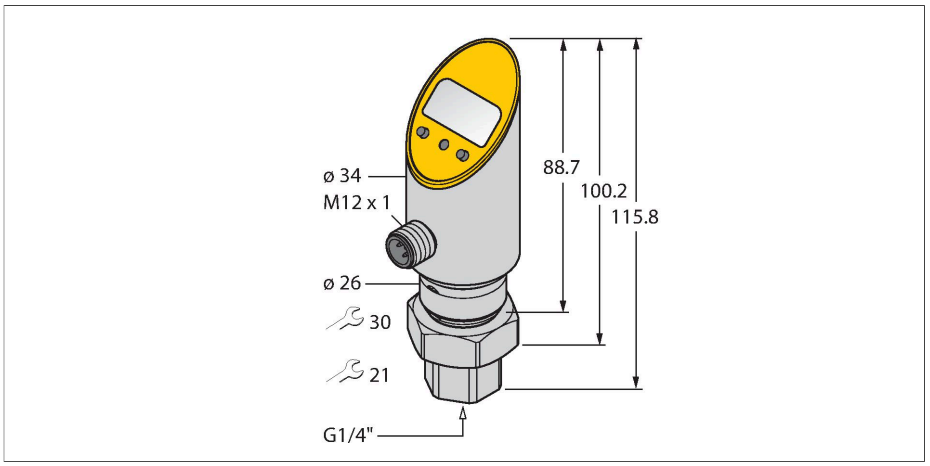

Technical data

Type	PS010A-501-2UPN8X-H1141/3GD
Ident. no.	6833908
Pressure range	
Absolute pressure bar abs.	0…10 bar abs.
	0…145 psi abs.
	0…1 MPa abs.
Admissible overpressure	≤ 25 bar
Burst pressure	≥ 25 bar
Response time	< 3 ms
Power supply	
Operating voltage	18…30 VDC
Current consumption	≤ 50 mA
Voltage drop at I_e	≤ 2 V
Protective measure	SELV; PELV according to EN 50178
Short-circuit/reverse polarity protection	yes / yes
Protection type and class	IP67 / IP69K / III
Outputs	
Output 1	Switching output or IO-Link mode
Output 2	switching output
Switching output	
Communication protocol	IO-Link
Output function	NO/NC, PNP/NPN

Features

- Housing is rotatable after plugging the process connection
- Reading of adjusted values without tool
- Recessed pushbutton and keylock for secure programming
- Permanent indication of pressure (bar, psi, kPa, MPa, misc)
- Peak pressure memory
- Pressure range 0…10 bar abs.
- ATEX category II 3 G, Ex zone 2
- ATEX category II 3 D, Ex zone 22

Wiring diagram

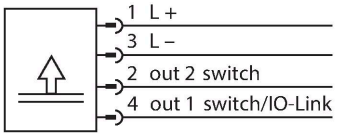

Functional principle

The pressure sensors of the PS series operate with piezo-resistive ceramic measuring cells. The ceramic diaphragm is unbalanced in proportion to the pressure applied. Depending on the sensor type, the voltage produced is made available either as switching or analog output signal. Non-rotatable and rotatable sensors, numerous thread types, front-flush or dead-zone free diaphragms and an accuracy of 0.5% of full scale guarantee highest flexibility and safe process interfacing.

PS010A-501-2UPN8X-H1141/3GD| 09/24/2020 03-14 | technical changes reserved

Technical data

Accuracy	± 0.5 % of final value BSL
Rated operational current	0.2 A
Switching frequency	≤ 180 Hz
Switching point distance	≥ 0.5 %
Switch point:	(min + 0.005 x range) up to 100% f.s.
Release point(s)	min up to (SP - 0.005 x range)
Switching cycles	≥ 100 mil.
IO-Link	
IO-Link specification	V 1.0
Programming	FDT / DTM
Transmission physics	corresponds to 3-wire physics (PHY2)
Transmission rate	COM 2 / 38.4 kbps
Process data width	16 bit
Measured value information	14 bit
Switchpoint information	2 bit
Frame type	2.2
Accuracy	± 0.5 % of full scale BSL
Included in the SIDI GSDML	Yes
Temperature behaviour	
Medium temperature	-40…+85 °C
Temperature coefficient zero point Tk0	± 0.15 % of full scale/10 K
Temperature coefficient span T_{kS}	± 0.15 % of full scale/10 K
Ambient conditions	
Ambient temperature	-40…+70 °C
Storage temperature	-40…+80 °C
Vibration resistance	20 g (9…2000 Hz), according to IEC 68-2-6
Shock resistance	50 g (11 ms) , acc. to IEC 68-2-27
EMV	EN 61000-4-2 ESD:4 kV CD / 8 kV AD EN 61000-4-3 HF radiated: 15 V/m EN 61000-4-4 Burst: 2 kV EN 61000-4-5 Surge: 1000 V, 42 Ohm EN 61000-4-6 HF cable bound: 10 V
Housing	
Housing material	Stainless-steel/Plastic, 1.4305 (AISI 303)
Pressure connection material	Stainless steel 1.4305 (AISI 303)
Pressure transducer material	Ceramics Al_2O_3
Sealing material	FPM spez.
Process connection	G 1/4" female thread

PS010A-501-2UPN8X-H1141/3GD| 09/24/2020 03-14 | technical changes reserved

Technical data

Wrench size pressure connection / coupling nut	21/ 30
Electrical connection	Connector, M12 × 1
Max. tightening torque housing nut	35 Nm
Reference conditions acc. to IEC 61298-1	
Temperature	15…+25 °C
Atmospheric pressure	860…1060 hPa abs.
Humidity	45…75 % rel.
Auxiliary power	24 VDC
Display	4-digit 7-segment display, rotatable by 180°, disengageable
Switching state	2 × LEDs, Yellow
Unit display	5 x LEDs green (bar, psi, kPa, MPa, misc)
Programming options	switch/release point, PNP/NPN; NO/ NC; hysteresis/window mode, muting; pressure unit, peak pressure memory
MTTF	439 years acc. to SN 29500 (Ed. 99) 40 °C
Included in delivery	SC-M12/3GD

PS010A-501-2UPN8X-H1141/3GD| 09/24/2020 03-14 | technical changes reserved

Operating Instructions

Intended use

This device fulfills the directive 2014/34/EC and is suited for use in explosion hazardous areas acc. to EN60079-0:2012, EN60079-15:2010 and EN60079-31:2009.In order to ensure correct operation to the intended purpose it is required to observe the national regulations and directives.

For use in explosion hazardous areas conform to classification

II 3 G and II 3 D (Group II, Category 3 G, electrical equipment for gaseous atmospheres and category 3 D, electrical equipment for dust atmospheres).

Marking (see device or technical data sheet)

Ⓔx II 3 G Ex nA IIC T5 Gc acc. to EN 60079-0:2012 and EN 60079-15:2010 and Ⓔx II 3 D Ex tc IIIC T90°C Dc acc. to EN 60079-0:2012 and EN 60079-31:2009

Local admissible ambient temperature

0…+60 °C

Installation/Commissioning

These devices may only be installed, connected and operated by trained and qualified staff. Qualified staff must have knowledge of protection classes, directives and regulations concerning electrical equipment designed for use in explosion hazardous areas.Please verify that the classification and the marking on the device comply with the actual application conditions.

Installation and mounting instructions

Avoid static charging of cables and plastic devices. Please only clean the device with a damp cloth. Do not install the device in a dust flow and avoid build-up of dust deposits on the device.The devices must be protected against strong magnetic fields.The pin configuration and the electrical specifications can be taken from the device marking or the technical data sheet.In order to avoid contamination of the device, please remove possible blanking plugs of the cable glands or connectors only shortly before inserting the cable or opening the cable socket.

Special conditions for safe operation

Do not disconnect the plug-in connection or cable under voltage.Please attach a warning label permanently in an appropriate fashion in close proximity to the plug-in connection with the following inscription: Nicht unter Spannung trennen / Do not separate when energized.The device must be protected against mechanical damage caused by energy > 4 Joule and harmful UV rays.The IP protection rating of the connectors is given only in combination with a suitable O-ringLoad voltage and operating voltage of this equipment must be supplied from power supplies with safe isolation (IEC 60 364/UL508), to ensure that the rated voltage of the equipment (24 VDC +20% = 28.8 VDC) is never exceeded by more than 40%.

Service/Maintenance

Repairs are not possible. The approval expires if the device is repaired or modified by a person other than the manufacturer. The most important data from the approval are listed.

PS010A-501-2UPN8X-H1141/3GD| 09/24/2020 03-14 | technical changes reserved