PT25R-2001-I2-H1141
Pressure Transmitter – With Current Output (2-Wire)

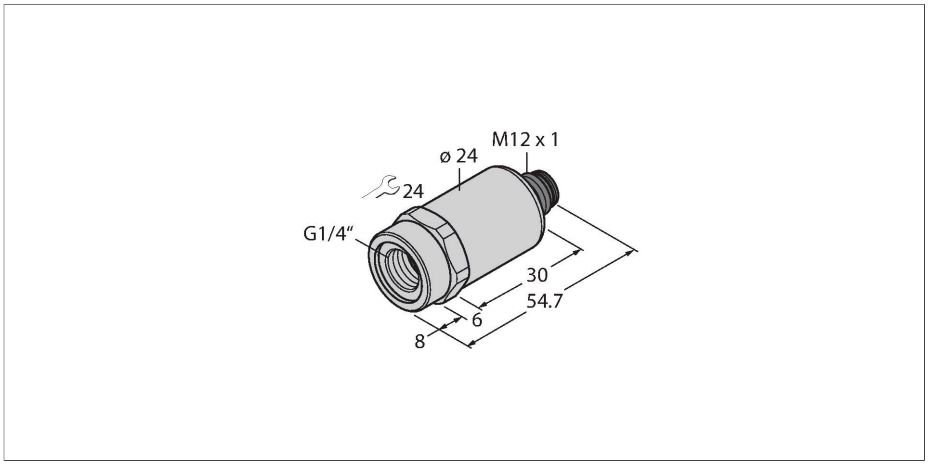



Technical data

Type	PT25R-2001-I2-H1141
ID	6836462
Medium temperature	-40…+135 °C
Pressure range	
Pressure type	Relative pressure
Pressure range	0…25 bar
	0…362.6 psi
	0…2.5 MPa
Admissible overpressure	≤ 75 bar
Burst pressure	≥ 150 bar
Response time	< 2 ms, typ. 1 ms
Long-term stability	± 0.25 % FS, according to IEC EN 60770-1
Power supply	
Operating voltage	7…33 VDC
Current consumption	≤ 23 mA
Short-circuit/reverse polarity protection	yes / yes
Insulation class	III
Outputs	
Output 1	Analog output
Output function	Analog output current
Analog output	
Current output	4…20 mA
Load	≤ (Supply voltage -7)/20 kΩ

Features

- Fully welded metal measuring cell
- Pressure range 0…25 bar rel.
- 7…33 VDC
- Analog output 4…20 mA
- Process connection G1/4" female thread, front sealing
- Connector device, M12 × 1

Wiring diagram

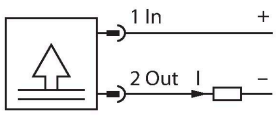

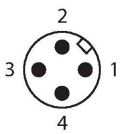

Functional principle

The pressure sensors in the PT…-2000 product series operate with a fully welded metal measuring cell in various pressure ranges of up to -1…1000 bar in 2-, 3- or even 4-wire technology. Depending on the sensor variant, the processed signal is available as an analog output signal (4…20 mA, 0… 10 V, 0…5 V, 1…6 V, ratiometric) or as a digital IO-Link process parameter. The IO-Link

PT25R-2001-I2-H1141| 06/06/2023 08-26 | technical changes reserved

Technical data

Resolution	<± 0.1 % FS
Accuracy LHR	±0.3 % FS (typical; max. ±0.5 % FS)
Mechanical data	
Housing material	Stainless-steel/Plastic, 1.4404 (AISI 316L)/polyarylamide 50 % GF UL 94 V-0
Process connection	G 1/4" female thread (front sealing)
Pressure connection material	Stainless steel 1.4404 (AISI 316L)
Pressure transducer material	Stainless steel 1.4016 (AISI 430)
Wrench size pressure connection / coupling nut	24
Max. tightening torque of housing nut	20 Nm
Electrical connection	Connector, M12 × 1
Protection class	IP67
Environmental conditions	
Ambient temperature	-30…+85 °C
Storage temperature	-50…+100 °C
Shock resistance	100 g, 11 ms, half sinusoidal curve, all 6 directions, free fall from 1 m onto concrete (6x) acc. to IEC 68-2-27
Vibration resistance	20 g, 15…2000 Hz, 15…25 Hz with amplitude ± 15 mm, 1 octave/minute in all 3 directions, 50 continuous loads
Tests/approvals	
UL registration number	E302799
Reference conditions acc. to IEC 61298-1	
Temperature	15…+25 °C
Atmospheric pressure	860…1060 hPa abs.
Humidity	45…75 % rel.
Auxiliary power	24 VDC
Temperature behaviour	
MTTF	1189 years acc. to SN 29500 (Ed. 99) 40 °C
Included in delivery	FKM O-ring special (1 pc)

Technical data

Type	PT25R-2001-I2-H1141
ID	6836462
Pressure range	
Pressure type	Relative pressure
Pressure range	0…25 bar

sensor variants also have two independently configurable switching outputs.
In addition to the standard variants, there are special sensors for uses such as ATEX areas or for oxygen applications.
A wide range of process connections and electrical connections offer a high degree of flexibility in a wide range of applications.

PT25R-2001-I2-H1141| 06/06/2023 08-26 | technical changes reserved

Technical data

	0…362.6 psi
	0…2.5 MPa
Admissible overpressure	≤ 75 bar
Burst pressure	≥ 150 bar
Response time	< 2 ms, typ. 1 ms
Long-term stability	0.25 % FS, according to IEC EN 60770-1
Power supply	
Operating voltage	7…33 VDC
Current consumption	≤ 23 mA
Short-circuit/reverse polarity protection	yes / yes
Protection type and class	IP67 / III
Insulation voltage	750 VDC
Outputs	
Output 1	Analog output
Output function	Analog output current
Analog output	
Current output	4…20 mA
Load	≤ (Supply voltage -7)/20 kΩ
Resolution	<± 0.1 % FS
Accuracy LHR	±0.3 % FS (typical; max. ±0.5 % FS)
Temperature behaviour	
Medium temperature	-40…+135 °C
Temperature coefficient	± 0.2 % of full scale/10 K
Environmental conditions	
Ambient temperature	-30…+85 °C
Storage temperature	-50…+100 °C
Vibration resistance	20 g, 15…2000 Hz, 15…25 Hz with amplitude ± 15 mm, 1 octave/minute in all 3 directions, 50 continuous loads, acc. to IEC 68-2-6
Shock resistance	100 g, 11 ms, half sinusoidal curve, all 6 directions, free fall from 1 m onto concrete (6x) acc. to IEC 68-2-27
Mechanical data	
Housing material	Stainless-steel/Plastic, 1.4404 (AISI 316L)/polyarylamide 50 % GF UL 94 V-0
Pressure connection material	Stainless steel 1.4404 (AISI 316L)
Pressure transducer material	Stainless steel 1.4016 (AISI 430)
Process connection	G 1/4" female thread (front sealing)

PT25R-2001-I2-H1141| 06/06/2023 08-26 | technical changes reserved

Technical data

Wrench size pressure connection / coupling nut	24
Electrical connection	Connector, M12 × 1
Max. tightening torque of housing nut	20 Nm
Reference conditions acc. to IEC 61298-1	
Temperature	15…+25 °C
Atmospheric pressure	860…1060 hPa abs.
Humidity	45…75 % rel.
Auxiliary power	24 VDC
Tests/approvals	
Approvals	cULus
UL registration number	E302799
MTTF	1189 years acc. to SN 29500 (Ed. 99) 40 °C
Included in delivery	FKM O-ring special (1 pc)

PT25R-2001-I2-H1141| 06/06/2023 08-26 | technical changes reserved