PT400R-2001-U1-H1141
Pressure Transmitter – With Voltage Output (3-Wire)

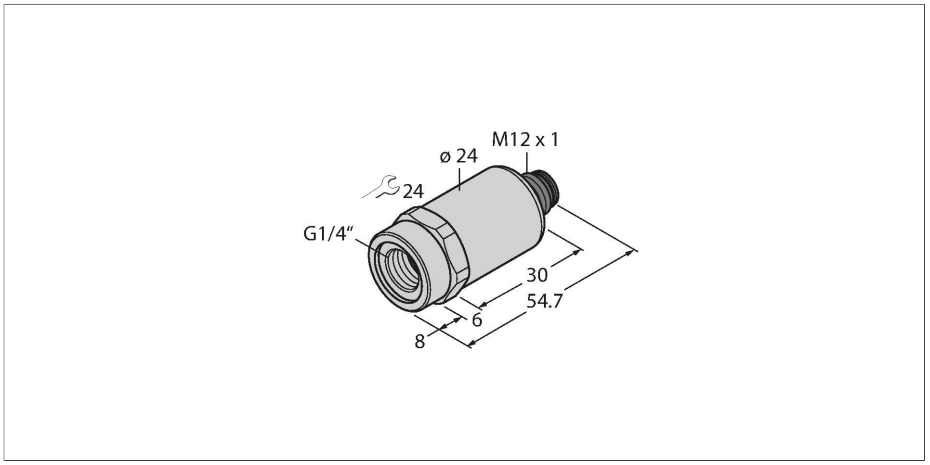



Technical data

Type	PT400R-2001-U1-H1141
ID	6836613
Medium temperature	-40…+135 °C
Pressure range	
Pressure type	Relative pressure
Pressure range	0…400 bar
	0…5801.51 psi
	0…40 MPa
Admissible overpressure	≤ 1200 bar
Burst pressure	≥ 2400 bar
Response time	< 2 ms, typ. 1 ms
Long-term stability	± 0.25 % FS, according to IEC EN 60770-1
Power supply	
Operating voltage	12…33 VDC
Current consumption	≤ 7 mA
Short-circuit/reverse polarity protection	yes / yes
Insulation class	III
Outputs	
Output 1	Analog output
Output function	Analog output voltage
Analog output	
Voltage output	0…10 V
Load	≤ 100 nF/>10 kΩ

Features

- Fully welded metal measuring cell
- Pressure range 0…400 bar rel.
- 12…33 VDC
- Analog output 0…10 V
- Process connection G1/4" female thread, front sealing
- Connector device, M12 × 1

Wiring diagram

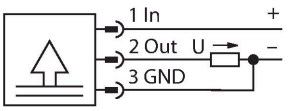

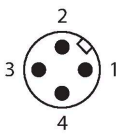

Functional principle

The pressure sensors in the PT…-2000 product series operate with a fully welded metal measuring cell in various pressure ranges of up to -1…1000 bar in 2-, 3- or even 4-wire technology. Depending on the sensor variant, the processed signal is available as an analog output signal (4…20 mA, 0… 10 V, 0…5 V, 1…6 V, ratiometric) or as a digital IO-Link process parameter. The IO-Link

PT400R-2001-U1-H1141| 06/06/2023 08-30 | technical changes reserved

Technical data

Resolution	<± 0.1 % FS
Accuracy LHR	±0.3 % FS (typical; max. ±0.5 % FS)
Mechanical data	
Housing material	Stainless-steel/Plastic, 1.4404 (AISI 316L)/polyarylamide 50 % GF UL 94 V-0
Process connection	G 1/4" female thread (front sealing)
Pressure connection material	Stainless steel 1.4404 (AISI 316L)
Pressure transducer material	Stainless steel 1.4435 (AISI 316L)
Wrench size pressure connection / coupling nut	24
Max. tightening torque of housing nut	20 Nm
Electrical connection	Connector, M12 × 1
Protection class	IP67
Environmental conditions	
Ambient temperature	-30…+85 °C
Storage temperature	-50…+100 °C
Shock resistance	100 g, 11 ms, half sinusoidal curve, all 6 directions, free fall from 1 m onto concrete (6x) acc. to IEC 68-2-27
Vibration resistance	20 g, 15…2000 Hz, 15…25 Hz with amplitude ± 15 mm, 1 octave/minute in all 3 directions, 50 continuous loads
Tests/approvals	
UL registration number	E302799
Reference conditions acc. to IEC 61298-1	
Temperature	15…+25 °C
Atmospheric pressure	860…1060 hPa abs.
Humidity	45…75 % rel.
Auxiliary power	24 VDC
Temperature behaviour	
MTTF	1238 years acc. to SN 29500 (Ed. 99) 40 °C
Included in delivery	FKM O-ring special (1 pc)

Technical data

Type	PT400R-2001-U1-H1141
ID	6836613
Pressure range	
Pressure type	Relative pressure
Pressure range	0…400 bar

sensor variants also have two independently configurable switching outputs.
In addition to the standard variants, there are special sensors for uses such as ATEX areas or for oxygen applications.
A wide range of process connections and electrical connections offer a high degree of flexibility in a wide range of applications.

PT400R-2001-U1-H1141| 06/06/2023 08-30 | technical changes reserved

Technical data

	0…5801.51 psi
	0…40 MPa
Admissible overpressure	≤ 1200 bar
Burst pressure	≥ 2400 bar
Response time	< 2 ms, typ. 1 ms
Long-term stability	0.25 % FS, according to IEC EN 60770-1
Power supply	
Operating voltage	12…33 VDC
Current consumption	≤ 7 mA
Short-circuit/reverse polarity protection	yes / yes
Protection type and class	IP67 / III
Insulation voltage	750 VDC
Outputs	
Output 1	Analog output
Output function	Analog output voltage
Analog output	
Voltage output	0…10 V
Load	≤ 100 nF/>10 kΩ
Resolution	<± 0.1 % FS
Accuracy LHR	±0.3 % FS (typical; max. ±0.5 % FS)
Temperature behaviour	
Medium temperature	-40…+135 °C
Temperature coefficient	± 0.2 % of full scale/10 K
Environmental conditions	
Ambient temperature	-30…+85 °C
Storage temperature	-50…+100 °C
Vibration resistance	20 g, 15…2000 Hz, 15…25 Hz with amplitude ± 15 mm, 1 octave/minute in all 3 directions, 50 continuous loads, acc. to IEC 68-2-6
Shock resistance	100 g, 11 ms, half sinusoidal curve, all 6 directions, free fall from 1 m onto concrete (6x) acc. to IEC 68-2-27
Mechanical data	
Housing material	Stainless-steel/Plastic, 1.4404 (AISI 316L)/polyarylamide 50 % GF UL 94 V-0
Pressure connection material	Stainless steel 1.4404 (AISI 316L)
Pressure transducer material	Stainless steel 1.4435 (AISI 316L)
Process connection	G 1/4" female thread (front sealing)

PT400R-2001-U1-H1141| 06/06/2023 08-30 | technical changes reserved

Technical data

Wrench size pressure connection / coupling nut	24
Electrical connection	Connector, M12 × 1
Max. tightening torque of housing nut	20 Nm
Reference conditions acc. to IEC 61298-1	
Temperature	15…+25 °C
Atmospheric pressure	860…1060 hPa abs.
Humidity	45…75 % rel.
Auxiliary power	24 VDC
Tests/approvals	
Approvals	cULus
UL registration number	E302799
MTTF	1238 years acc. to SN 29500 (Ed. 99) 40 °C
Included in delivery	FKM O-ring special (1 pc)

PT400R-2001-U1-H1141| 06/06/2023 08-30 | technical changes reserved