PT1R-1001-I2-H1141
Pressure Transmitter – With Current Output (2-Wire)

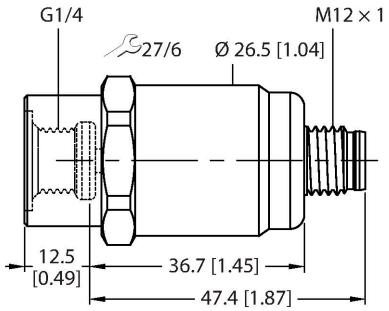

Features

- Ceramic measuring cell
- Compact and robust design
- Excellent EMC properties
- Pressure range 0…1 bar rel.
- 7…33 VDC
- Analog output 4…20 mA
- Process connection G1/4" female thread, front sealing
- Connector device, M12 × 1

Technical data

Type	PT1R-1001-I2-H1141
ID	6836703
Medium temperature	-40…+125 °C
Pressure range	
Pressure type	Relative pressure
Pressure range	0…1 bar
	0…14.5 psi
	0…0.1 MPa
Admissible overpressure	≤ 3 bar
Burst pressure	≥ 3 bar
Response time	< 2 ms, typ. 1 ms
Long-term stability	± 0.25 % FS, according to IEC EN 60770-1
Power supply	
Operating voltage	7…33 VDC
Current consumption	≤ 23 mA
Short-circuit/reverse polarity protection	yes / yes
Insulation class	III
Outputs	
Output 1	Analog output
Output function	Analog output current
Analog output	
Current output	4…20 mA
Load	≤ (Supply voltage -7)/20 kΩ

Wiring diagram

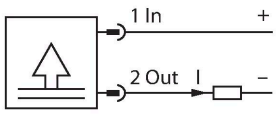

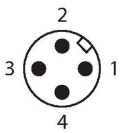

Functional principle

The pressure sensors in the PT…-1000 product series operate with a ceramic measuring cell in various pressure ranges of up to -1…60 bar in 2-, 3- or even 4-wire technology. Depending on the sensor variant, the processed signal is available as an analog output signal (4…20 mA, 0…10 V, 0…5 V, 1…6 V, ratiometric) or as a digital IO-Link process parameter. The IO-Link sensor variants also have two independently configurable switching outputs.
In addition to the standard variants, there are special sensors for uses such as ATEX areas or for oxygen applications.
A wide range of process connections and electrical connections offer a high degree of flexibility in a wide range of applications.

PT1R-1001-I2-H1141| 06/06/2023 08-38 | technical changes reserved

Technical data

Resolution	<± 0.1 % FS
Accuracy LHR	±0.3 % FS (typical; max. ±0.5 % FS)
Mechanical data	
Housing material	Stainless-steel/Plastic, 1.4404 (AISI 316L)/polyarylamide 50 % GF UL 94 V-0
Process connection	G 1/4" female thread (front sealing)
Pressure connection material	Stainless steel 1.4404 (AISI 316L)
Pressure transducer material	Ceramic Al_2O_3
Sealing material	FPM spez.
Wrench size pressure connection / coupling nut	24
Max. tightening torque of housing nut	20 Nm
Electrical connection	Connector, M12 × 1
Protection class	IP67
Environmental conditions	
Ambient temperature	-30…+85 °C
Storage temperature	-50…+100 °C
Shock resistance	100 g, 11 ms, half sinusoidal curve, all 6 directions, free fall from 1 m onto concrete (6x) acc. to IEC 68-2-27
Vibration resistance	20 g, 15…2000 Hz, 15…25 Hz with amplitude ± 15 mm, 1 octave/minute in all 3 directions, 50 continuous loads
Tests/approvals	
UL registration number	E302799
Reference conditions acc. to IEC 61298-1	
Temperature	15…+25 °C
Atmospheric pressure	860…1060 hPa abs.
Humidity	45…75 % rel.
Auxiliary power	24 VDC
Temperature behaviour	
MTTF	1189 years acc. to SN 29500 (Ed. 99) 40 °C
Included in delivery	FKM O-ring special (1 pc)

Technical data

Type	PT1R-1001-I2-H1141
ID	6836703
Pressure range	
Pressure type	Relative pressure

PT1R-1001-I2-H1141| 06/06/2023 08-38 | technical changes reserved

Technical data

Pressure range	0…1 bar
	0…14.5 psi
	0…0.1 MPa
Admissible overpressure	≤ 3 bar
Burst pressure	≥ 3 bar
Response time	< 2 ms, typ. 1 ms
Long-term stability	0.25 % FS, according to IEC EN 60770-1
Power supply	
Operating voltage	7…33 VDC
Current consumption	≤ 23 mA
Short-circuit/reverse polarity protection	yes / yes
Protection type and class	IP67 / III
Insulation voltage	750 VDC
Outputs	
Output 1	Analog output
Output function	Analog output current
Analog output	
Current output	4…20 mA
Load	≤ (Supply voltage -7)/20 kΩ
Resolution	<± 0.1 % FS
Accuracy LHR	±0.3 % FS (typical; max. ±0.5 % FS)
Temperature behaviour	
Medium temperature	-40…+125 °C
Temperature coefficient	± 0.2 % of full scale/10 K
Environmental conditions	
Ambient temperature	-30…+85 °C
Storage temperature	-50…+100 °C
Vibration resistance	20 g, 15…2000 Hz, 15…25 Hz with amplitude ± 15 mm, 1 octave/minute in all 3 directions, 50 continuous loads, acc. to IEC 68-2-6
Shock resistance	100 g, 11 ms, half sinusoidal curve, all 6 directions, free fall from 1 m onto concrete (6x) acc. to IEC 68-2-27
Mechanical data	
Housing material	Stainless-steel/Plastic, 1.4404 (AISI 316L)/polyarylamide 50 % GF UL 94 V-0
Pressure connection material	Stainless steel 1.4404 (AISI 316L)
Pressure transducer material	Ceramic Al_2O_3
Sealing material	FPM spez.

PT1R-1001-I2-H1141| 06/06/2023 08-38 | technical changes reserved

Technical data

Process connection	G 1/4" female thread (front sealing)
Wrench size pressure connection / coupling nut	24
Electrical connection	Connector, M12 × 1
Max. tightening torque of housing nut	20 Nm
Reference conditions acc. to IEC 61298-1	
Temperature	15…+25 °C
Atmospheric pressure	860…1060 hPa abs.
Humidity	45…75 % rel.
Auxiliary power	24 VDC
Tests/approvals	
Approvals	cULus
UL registration number	E302799
MTTF	1189 years acc. to SN 29500 (Ed. 99) 40 °C
Included in delivery	FKM O-ring special (1 pc)

PT1R-1001-I2-H1141| 06/06/2023 08-38 | technical changes reserved