# PT150PSIG-1003-I2-H1141
# Pressure Transmitter – With Current Output (2-Wire)

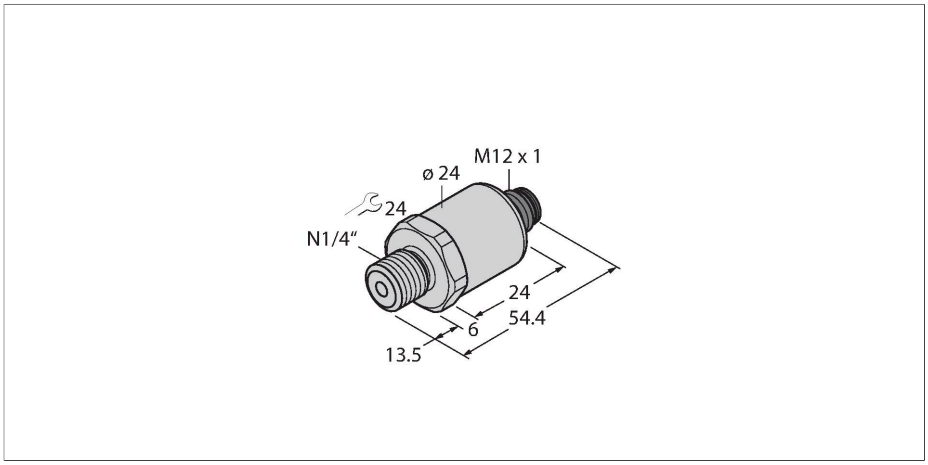


## Features

- Ceramic measuring cell
- Compact and robust design
- Excellent EMC properties
- Pressure range 0…150 psi relative
- 7…33 VDC
- Analog output 4…20 mA
- Process connection 1/4"-18 NPT male thread
- Plug-in device, M12 × 1

## Wiring diagram

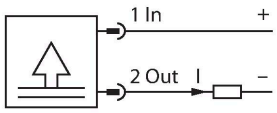


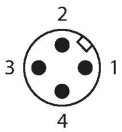


## Technical data

| | |
|---|---|
| Type | PT150PSIG-1003-I2-H1141 |
| Ident. no. | 6837496 |
| **Pressure range** | |
| Relative pressure | 0…10.3 bar rel. |
| | 0…150 psi |
| | 0…1.03 MPa |
| Admissible overpressure | ≤ 30 bar |
| Burst pressure | ≥ 30 bar |
| Response time | < 2 ms, typ. 1 ms |
| Long-term stability | 0.25 % FS, according to IEC EN 60770-1 |
| **Power supply** | |
| Operating voltage | 7…33 VDC |
| Current consumption | ≤ 23 mA |
| Short-circuit/reverse polarity protection | yes / yes |
| Protection type and class | IP67 / III |
| Insulation voltage | 750 VDC |
| **Outputs** | |
| Output 1 | Analog output |
| Output function | Analog output current |
| **Analog output** | |
| Current output | 4…20 mA |
| Load | ≤ (Supply voltage -7)/20 kΩ |
| Resolution | <± 0.1 % FS |

## Functional principle

The pressure sensors of the PT …-1000 series operate with a ceramic measuring cell. Depending on the sensor variant, the processed signal is available as an analog output signal via 4…20 mA (2-wire). 0… 10 V, 0…5 V and 1…6 V (3-wire) or as an IO-Link process parameter. The IO-Link sensor versions also have two independently configurable switching outputs.

PT150PSIG-1003-I2-H1141| 09/24/2020 01-46 | technical changes reserved

## Technical data

| | |
|---|---|
| Accuracy LHR | ± 0.3 % FS BSL |
| **Temperature behaviour** | |
| Medium temperature | -40…+125 °C |
| Temperature coefficient | ± 0.2 % of full scale/10 K |
| **Ambient conditions** | |
| Ambient temperature | -30…+85 °C |
| Storage temperature | -50…+100 °C |
| Vibration resistance | 20 g, 15…2000 Hz, 15…25 Hz with amplitude +/- 15 mm, 1 octave/minute all 3 directions, 50 continuous loads, acc. to IEC 68-2-6 |
| Shock resistance | 100 g, 11 ms, half sinusoidal curve, all 6 directions, free fall from 1 m onto concrete (6x) , acc. to IEC 68-2-27 |
| **Housing** | |
| Housing material | Stainless-steel/Plastic, 1.4404 (AISI 316L)/polyacrylamide 50 % GF UL 94 V-0 |
| Pressure connection material | Stainless steel 1.4404 (AISI 316L) |
| Pressure transducer material | Ceramics $Al_2O_3$ |
| Sealing material | FPM spez. |
| Process connection | 1/4" NPT-18 male thread |
| Wrench size pressure connection / coupling nut | 24 |
| Electrical connection | Connector, M12 × 1 |
| Max. tightening torque housing nut | 20 Nm |
| **Reference conditions acc. to IEC 61298-1** | |
| Temperature | 15…+25 °C |
| Atmospheric pressure | 860…1060 hPa abs. |
| Humidity | 45…75 % rel. |
| Auxiliary power | 24 VDC |
| Approvals | UL E302799 |
| MTTF | 1189 years acc. to SN 29500 (Ed. 99) 40 °C |

PT150PSIG-1003-I2-H1141| 09/24/2020 01-46 | technical changes reserved