# FTCI-MP01AL
# Accessories – Mounting Panel
# For Flow Meters

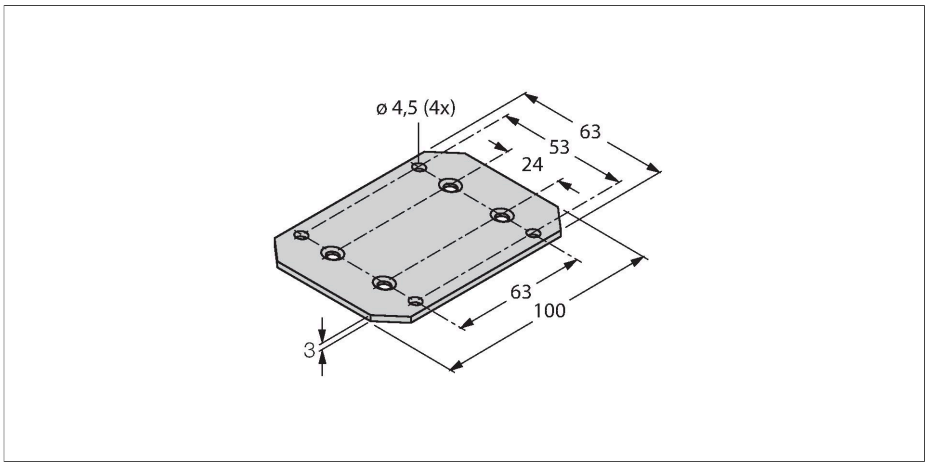


## Features

- For simple front mounting
- For FTCI flow meter

## Technical data

| | |
|---|---|
| ID | 6870040 |
| Type | FTCI-MP01AL |
| Housing material | Aluminium, AL |

FTCI-MP01AL | 01/09/2026 18-15 | technical changes reserved