FTCI-10D10A4P-2LIX-H1141
Flow Rate Monitoring – Inline Sensor with Integrated Processor

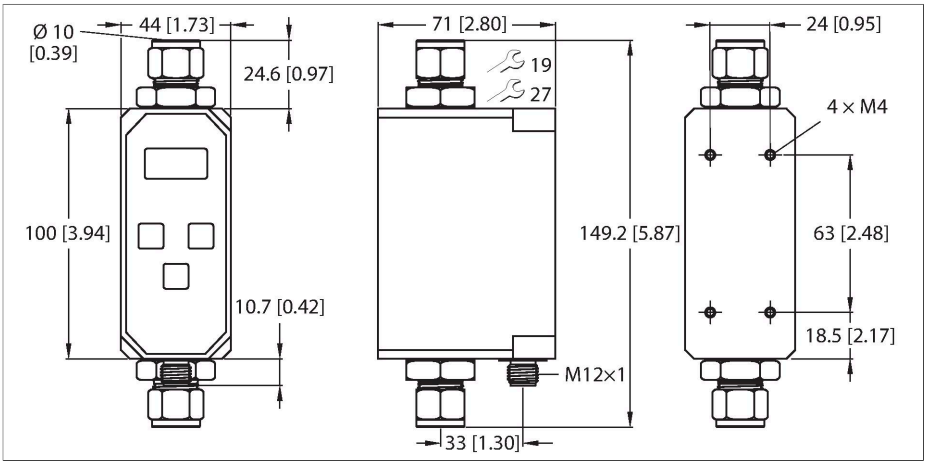

Features

- Flow meter for water and water/glycol mixes up to 30%
- Calorimetric measuring principle
- Display and monitoring of flow rate and temperature
- Prog. via pushbutton, code-protected
- Repeatability < 10% f.s.
- Sealant between measuring tube and process connection FKM 5
- Output flow 4…20 mA, linear
- Output temperature 4…20 mA, linear
- DC 4-wire, 21.6…26.4 VDC
- 4…20 mA analog output
- Plug-in device, M12 x 1

Technical data

ID	6870049
Type	FTCI-10D10A4P-2LIX-H1141
Mounting	Inline sensor
Application area	flow rate/temperature monitoring of water or water/glycol mix
Flow operating range	1…10 l/min
Stand-by time	6…10 s
Temperature gradient	≤ 400 K/min
Medium temperature	-10…+90 °C
Ambient temperature	0…+60 °C
Electrical data	
Operating voltage U_B	21.6…26.4 VDC
Current consumption	≤ 100 mA
Output function	Analog output
Short-circuit protection	yes
Reverse polarity protection	yes
Current output	4…20 mA
Load	200…500 Ω
Protection class	IP65
Mechanical data	
Design	Inline
Housing material	Plastic, PBT
Sensor material	Stainless steel, 1.4571 (AISI 316Ti)
Electrical connection	Connector, M12 x 1

Wiring diagram

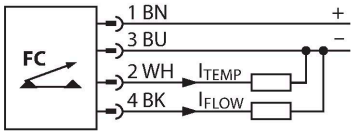

Functional principle

The FTCI sensors from TURCK operate reliably and wear-free and indicate flow rates digitally. They are used in all kinds of flow monitoring applications. Particularly in cooling circuits, where flow rates have to be displayed. Based on the thermodynamic principle, heat is generated and then conducted away by the flowing medium. The dissipated heat quantity is used as a measure of flow speed. A microprocessor evaluates the data, calculates the flow rate and indicates the result in l/min via a 3-digit 7-segment display.

FTCI-10D10A4P-2LIX-H1141| 01/09/2026 18-16 | technical changes reserved

Technical data

Process Pressure	20 bar
Process connection	Compression fittings for pipes Ø 10 × 1 (EN10305-1)
Flow state display	7-segment display, switching status LED (yellow)
Indication: Setpoint reached	Yellow
Programming options	glycol concentration, flow rate correction, mean value, access code
Tests/approvals	

FTCI-10D10A4P-2LIX-H1141| 01/09/2026 18-16 | technical changes reserved