FCST-A4P-LIX-H1141
Freely Rotatable FCST Flow Sensor – Monitoring of Flow Speed Analog Output 4…20 mA

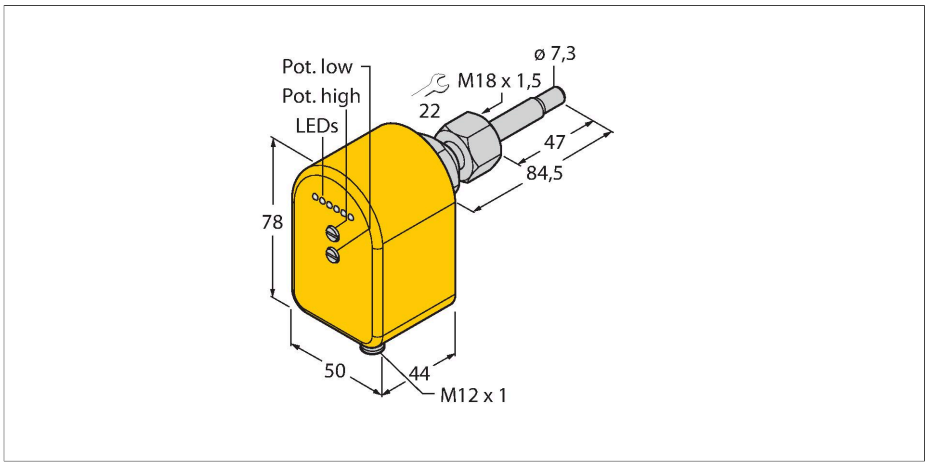

Technical data

Ident. no.	6870255
Type	FCST-A4P-LIX-H1141
Mounting	Immersion sensor
Water Operating Range	1…150 cm/s
Oil Operating Range	3…300 cm/s
Stand-by time	8…60 s
Switch-on time	3 s
Medium temperature	-20…+80 °C
Ambient temperature	-20…+70 °C
Operating voltage	21.6…26.4 VDC
Current consumption	≤ 100 mA
Output function	Analog output
Current output	4…20 mA
Protection class	IP67
Design	Immersion
Housing material	Plastic, PBT
Sensor material	Stainless steel, V4A (1.4571)
Seal	FPM
Electrical connection	Connector, M12 × 1
Process Pressure	100 bar
Process connection	M18 × 1.5 female thread

Features

- Thermodynamic operating principle
- Flow monitoring
- Switchpoint freely adjustable
- Adjusted via potentiometer
- LED band for indications
- Adjustable to high and low flow
- Analog output
- 4…20 mA
- Freely rotatable sensor
- Plugged in with adapter
- Screw-in adapter, M18 x 1.5

Wiring diagram

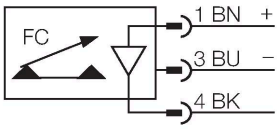

Functional principle

The FCST flow sensors operate on the thermodynamic principle.

Thanks to the modular plug-in concept, they can be aligned freely within the flow channel, independent from the process connection. The modular concept makes installation and precise alignment of the sensor easy which is very important for flow monitoring.

The adapters are available in all standard industrial thread sizes. The sensor-adapter system can thus be adjusted easily to any application requirements. The modular concept makes the system also very resistant to high pressures.

Especially flow sensors with integrated signal processor profit from the modular FCST concept. Thanks to the freely alignable sensor, the LED display is always easy to read and the potentiometers for the adjustment of the swichpoint or analog signal are always within reach.

FCST-A4P-LIX-H1141| 05/27/2020 22-48 | technical changes reserved

LED display

LED	Color	Status	Description
LED 1	red	on	The flow is below the lowest (Low) flow to be monitored.
LED 2 … 6	green	on	The flow is between the lowest (Low) and the highest (High) flow to be monitored.

Mounting instructions

Mounting Adapter	The freely rotatable flow sensors are mounted with the FCA-FCST adapter. The adapter is screwed in a T piece or a welding sleeve and sealed accordingly. When assembling adapters with cylindrical thread, use the enclosed seal (e.g. G1/4, G1/2, G3/4, etc.). Mounting adapters with NPT-thread are generally delivered without seal (e.g. N1/2). Use hemp or teflon tape The sensor is fixed in the adapter by means of a captive nut fitted between the upper housing part and the cone seat.
Mounting position	In order to minimize potential misinterpretations due to disturbance, it is recommended to position the sensor with a minimum separation distance of 3 x di before and 5 x di after bends, changes in cross section, valves, etc.. ■ If the flow channel is not completely filled with the medium, it is recommended to install the sensor from underneath. ■ If deposits are likely to built up, it is recommended to install the sensor on the side. It is important to note that deposits can also form on the tip, which may affect the monitoring results. Therefore, it is recommended to clean the sensor at regular intervals and to select the associated service interval accordingly. ■ If blistering is to be expected, ensure that there is no air bubble located in the area of the tip when installing the sensor. ■ If the sensor is mounted in vertical piping systems, it is recommended to position the sensor within the riser.
Correct installation	To retrieve the full performance potential of the sensor, it must be aligned correctly. In particular when monitoring bad heat-conductive media such as oils, liquids with high solids, abrasive media, etc., when exposed to fast temperature changes (K/min) and, in general, near components with analog output. Correct installation is ensured, as soon as the effective flow direction of the application matches the direction of flow indicated by the "arrow" on the sensor.

Adjustment guidelines

Analog outputs	Flow sensors with analog outputs provide current in the range of 4 … 20 mA, depending on the flow velocity of the medium. The relationship between the flow velocity and the output current is linear or non-linear depending on the type of sensor. The operating range is set via the two potentiometers. ■ At the lowest flow velocity to be monitored, the value is set to 4 mA with the potentiometer (Low), only applies to the non-linear type. ■ At the highest flow velocity to be monitored, the value is set to 20 mA with the potentiometer (High).

FCST-A4P-LIX-H1141| 05/27/2020 22-48 | technical changes reserved