FCS-G1/2A4-NA-H1141/L080
Flow Monitoring – Immersion Sensor without Integrated Processor

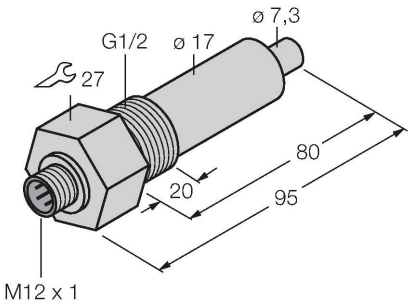

Technical data

Ident. no.	6870317
Type	FCS-G1/2A4-NA-H1141/L080
Mounting	Immersion sensor
Water Operating Range	1…150 cm/s
Oil Operating Range	3…300 cm/s
Stand-by time	typ. 8 s (2…15 s)
Switch-on time	typ. 2 s (1…15 s)
Switch-off time	typ. 2 s (1…15 s)
Temperature jump, response time	max. 12 s
Temperature gradient	≤ 250 K/min
Medium temperature	-20…+80 °C
Protection class	IP67
Design	Immersion
Housing material	Stainless steel, V4A (1.4571)
Sensor material	Stainless steel, V4A (1.4571)
Max. tightening torque housing nut	30 Nm
Electrical connection	Connector, M12 × 1
Process Pressure	100 bar
Process connection	G ½“

Features

- Sensor for liquid media
- Calorimetric functionality
- Adjustment via signal processor
- Status indicated via LED chain on signal processor
- Sensor length 80 mm
- Connector device, M12 × 1
- 4-wire connection to the processor

Wiring diagram

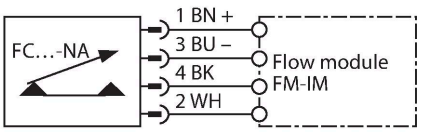

Functional principle

Our insertion - flow sensors operate on the principle of thermodynamics. The measuring probe is heated by several °C as against the flow medium. When fluid moves along the probe, the heat generated in the probe is dissipated. The resulting temperature is measured and compared to the medium temperature. The flow status of every medium can be derived from the evaluated temperature difference. Thus TURCK's wear-free flow sensors reliably monitor the flow of gaseous and liquid media.

FCS-G1/2A4-NA-H1141/L080| 05/27/2020 22-49 | technical changes reserved