FCS-G1/2A4-NAEX0/AL065
Flow Monitoring – Immersion Sensor without Integrated Processor

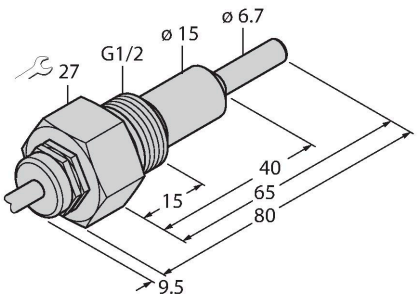

Technical data

Ident. no.	6870346
Type	FCS-G1/2A4-NAEX0/AL065
Mounting	Immersion sensor
Air Operating Range	2…25 m/s
Stand-by time	10…40 s
Switch-on time	Typ. 5 s (2…30 s)
Switch-off time	Typ. 5 s (2…30 s)
Temperature jump, response time	max. 120 s
Temperature gradient	≤ 1 K/min
Medium temperature	-20…+60 °C
Important note	**For intrinsically safe applications, the values specified in the corresponding Ex certificates (ATEX, IECEX, UL, etc.) apply.**
Device marking	Ⓔx II 1/2 G Ex ia IIC T4 Ga/Gb Ⓔx II 1 D Ex ia IIIC T120 °C Da
Ignition protection category	Gas Ex ia IIC; dust Ex ia IIIC
Power	≤ 0.69 W
Internal inductances/capacitances	negligibly small
Ex approval acc. to conformity certificate	TÜV 99 ATEX 1517X
Protection class	IP67
Design	Immersion
Housing material	Stainless steel, V4A (1.4571)
Sensor material	Stainless steel, V4A (1.4571)
Max. tightening torque housing nut	30 Nm

Features

- Intrinsically safe flow sensor for gaseous media
- Calorimetric principle
- Adjustment via intrinsically safe processor
- Status indicated via LED chain on signal processor
- Cable device
- 4-wire connection to an Ex0 processor
- ATEX category II 1/2 G, Ex-zone 0
- ATEX category II 1 D, Ex zone 20

Wiring diagram

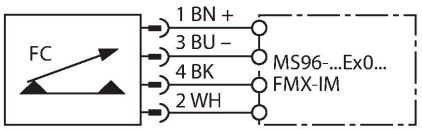

Functional principle

Our insertion - flow sensors operate on the principle of thermodynamics. The measuring probe is heated by several °C as against the flow medium. When fluid moves along the probe, the heat generated in the probe is dissipated. The resulting temperature is measured and compared to the medium temperature. The flow status of every medium can be derived from the evaluated temperature difference. Thus TURCK's wear-free flow sensors reliably monitor the flow of gaseous and liquid media.

FCS-G1/2A4-NAEX0/AL065] 05/27/2020 23-02 | technical changes reserved

Technical data

Electrical connection	Cable
Cable length (L)	2 m
Cable quality	Blue
Cable Jacket Material	PUR
Core cross-section	4 x 0.25 mm^2
Process Pressure	10 bar
Process connection	G ½“

FCS-G1/2A4-NAEX0/AL065| 05/27/2020 23-02 | technical changes reserved

Operating Instructions

Intended use

This device fulfills Directive 2014/34/EC and is suited for use in areas exposed to explosion hazards according to EN 60079-0:2012 and EN 60079-11:2012.In order to ensure correct operation to the intended purpose it is required to observe the national regulations and directives.

For use in explosion hazardous areas conform to classification

The sensors may be used only in dust or gas areas
II 1 G (Group II, Category 1 G, electrical equipment for gaseous atmospheres).
II 2 G (Group II, Category 2 G, electrical equipment for gaseous atmospheres).
II 1 D (Group II, Category 1 D, electrical equipment for dust atmospheres).

Installation/Commissioning

These devices may only be installed, connected and operated by trained and qualified staff. Qualified staff must have knowledge of protection classes, directives and regulations concerning electrical equipment designed for use in explosion hazardous areas.Please verify that the classification and the marking on the device comply with the actual application conditions.

This device is only suited for connection to approved Exi circuits according to EN 60079-0 and EN 60079-11. Please observe the maximum admissible electrical values.After connection to other circuits the sensor may no longer be used in Exi installations. When interconnected to (associated) electrical equipment, it is required to perform the "Proof of intrinsic safety" (EN60079-14).

Installation and mounting instructions

Avoid static charging of cables and plastic devices. Please only clean the device with a damp cloth. Do not install the device in a dust flow and avoid build-up of dust deposits on the device.If the devices and the cable could be subject to mechanical damage, they must be protected accordingly. They must also be shielded against strong electro-magnetic fields.The pin configuration and the electrical specifications can be taken from the device marking or the technical data sheet.In order to avoid contamination of the device, please remove possible blanking plugs of the cable glands or connectors only shortly before inserting the cable or opening the cable socket.

Special conditions for safe operation

The device must be protected against any kind of mechanical damage.

Service/Maintenance

Repairs are not possible. The approval expires if the device is repaired or modified by a person other than the manufacturer. The most important data from the approval are listed.

FCS-G1/2A4-NAEX0/AL065| 05/27/2020 23-02 | technical changes reserved