FCS-G1/2A4P-AP8X-H1141/L080
Flow Monitoring – Immersion Sensor with Integrated Processor

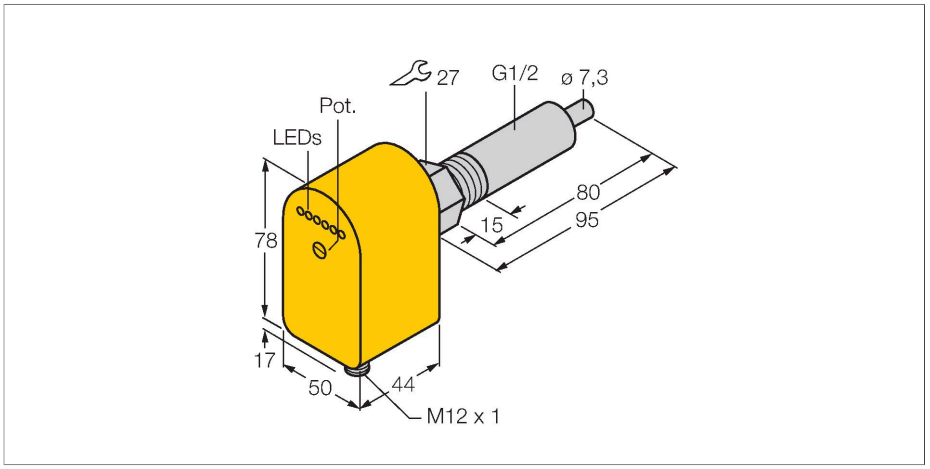

Technical data

Ident. no.	6870364
Type	FCS-G1/2A4P-AP8X-H1141/L080
Mounting	Immersion sensor
Water Operating Range	1…150 cm/s
Oil Operating Range	3…300 cm/s
Stand-by time	typ. 8 s (2…15 s)
Switch-on time	typ. 2 s (1…13 s)
Switch-off time	typ. 2 s (1…15 s)
Temperature jump, response time	max. 12 s
Temperature gradient	≤ 250 K/min
Medium temperature	-20…+80 °C
Ambient temperature	-20…+70 °C
Operating voltage	19.2…28.8 VDC
Current consumption	≤ 60 mA
Output function	PNP, NO contact
Rated operational current	0.4 A
Voltage drop at I_e	≤ 1.5 V
Short-circuit protection	yes
Reverse polarity protection	yes
Protection class	IP67
Design	Immersion
Housing material	Plastic, PBT
Sensor material	Stainless steel, V4A (1.4571)
Max. tightening torque housing nut	30 Nm

Features

- Sensor for liquid media
- Calorimetric principle
- Adjustment via potentiometer
- Status indicated via LED chain
- Sensor length 80 mm
- DC 3-wire, 19.2…28.8 VDC
- NO contact, PNP output
- Connector device, M12 × 1

Wiring diagram

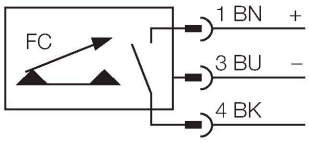

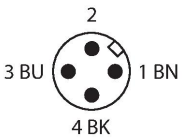

Functional principle

Our insertion - flow sensors operate on the principle of thermodynamics. The measuring probe is heated by several °C as against the flow medium. When fluid moves along the probe, the heat generated in the probe is dissipated. The resulting temperature is measured and compared to the medium temperature. The flow status of every medium can be derived from the evaluated temperature difference. Thus TURCK's wear-free flow sensors reliably monitor the flow of gaseous and liquid media.

FCS-G1/2A4P-AP8X-H1141/L080| 05/27/2020 22-51 | technical changes reserved

Technical data

Electrical connection	Connector, M12 × 1
Process Pressure	100 bar
Process connection	G ½“
Switching state	LED chain, Green/Yellow/Red
Flow state display	LED chain
Indication: Drop below setpoint	LED red
Indication: Setpoint reached	LED yellow
Indication: Setpoint exceeded	4 x LEDs green

FCS-G1/2A4P-AP8X-H1141/L080| 05/27/2020 22-51 | technical changes reserved