FCS-GL1/2A2-NA/A/D100
Flow Monitoring – Immersion Sensor without Integrated Processor

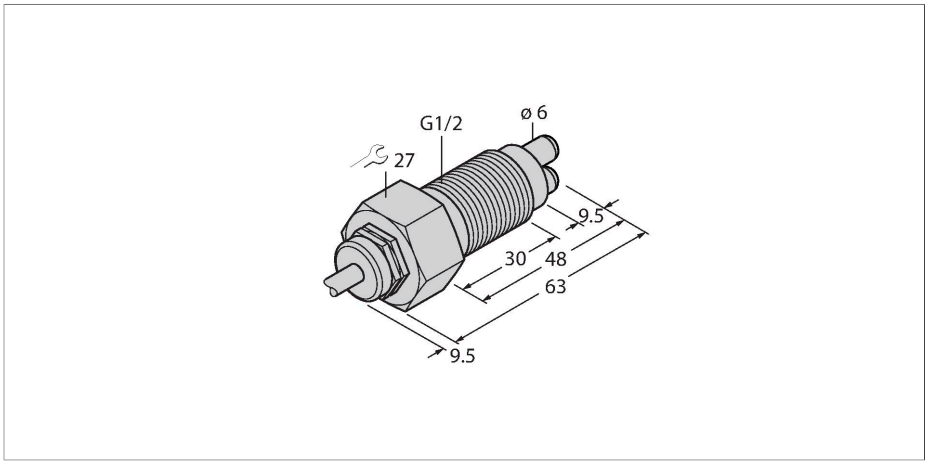

Technical data

Ident. no.	6870380
Type	FCS-GL1/2A2-NA/A/D100
Special version	D100 corresponds to: temperature range 10…120 °C
Mounting	Immersion sensor
Air Operating Range	0.5…30 m/s
Stand-by time	10…90 s
Switch-on time	2…30 s
Switch-off time	5…30 s
Temperature jump, response time	max. 60 s
Temperature gradient	≤ 20 K/min
Medium temperature	10…+120 °C
Protection class	IP68
Design	Immersion
Housing material	Stainless steel, V2A (1.4305)
Sensor material	Stainless steel, V2A (1.4305)
Max. tightening torque housing nut	30 Nm
Electrical connection	Cable
Cable length (L)	2 m
Cable Jacket Material	FEP
Core cross-section	4 x 0.25 mm²
Process Pressure	30 bar
Process connection	G ½" long version

Features

- Sensor for gaseous media
- Calorimetric functionality
- Adjustment via signal processor
- Status indicated via LED chain on signal processor
- Temperature range: 10…+120 °C
- Cable device
- 4-wire connection to the processor

Wiring diagram

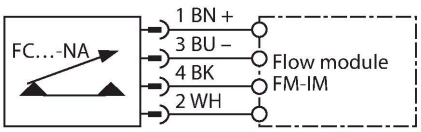

Functional principle

Our insertion - flow sensors operate on the principle of thermodynamics. The measuring probe is heated by several °C as against the flow medium. When fluid moves along the probe, the heat generated in the probe is dissipated. The resulting temperature is measured and compared to the medium temperature. The flow status of every medium can be derived from the evaluated temperature difference. Thus TURCK's wear-free flow sensors reliably monitor the flow of gaseous and liquid media.

FCS-GL1/2A2-NA/A/D100| 05/27/2020 22-52 | technical changes reserved