FCMI-15D12DYA4P-LIUP8X-H1141
Flow Rate Measurement – Inline Sensor with Integrated Processor

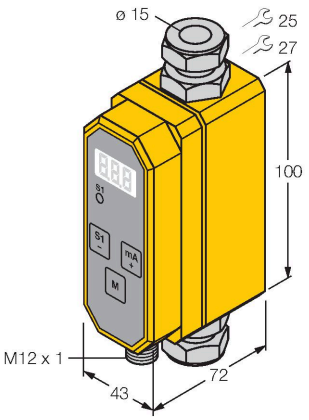

Technical data

Ident. no.	6870601
Type	FCMI-15D12DYA4P-LIUP8X-H1141
Mounting	Inline sensor
Application area	liquids
Flow operating range	0…80 l/min
Stand-by time	6…10 s
Switch-on time	0.5…8 s
Medium temperature	5…+60 °C
Ambient temperature	0…+60 °C
Operating voltage	21.6…26.4 VDC
Current consumption	≤ 100 mA
Output function	PNP/Analog output, NO/NC programmable
Rated operational current	0.2 A
Short-circuit protection	yes
Reverse polarity protection	yes
Current output	4…20 mA
Load	200…500 Ω
Protection class	IP65
Design	Inline
Housing material	Plastic, PBT
Sensor material	Stainless-steel/Plastic, V4A (1.4571)/PVDF
Electrical connection	Connector, M12 × 1
Process Pressure	10 bar

Features

- Programmable sensor for electrically conductive liquids
- Magnetic-inductive principle
- Display and monitoring of flow
- 3-digit display in [l/min]
- Measuring accuracy 0…10l/min: <+/-0.2 l/min
- Measuring accuracy 10…80l/min: < +/-2% of minimum value
- Minimum conductivity > 20 µS/cm (water > 30 µS/cm)
- Programming via button and access code protected
- DC 4-wire, 21.6…26.4 VDC
- NO/NC prog., PNP output
- 4…20 mA analog output
- Analog output provides a current signal proportional to the flow rate for the overall operating range
- Plug-in device, M12 x 1

Wiring diagram

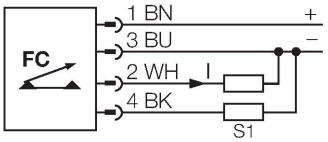

Functional principle

The magnetic-inductive inline flow meter FCMI by TURCK is based on the Faraday principle. A measuring tube permeating magnetic field deviates the free charge carriers in the targeted medium to the tube walls. Voltage is created by electrical separation and picked up by two laterally mounted electrodes. The voltage quantity depends on the flow rate i.e.flow if the magnetic field is known. Thus the FCMI flow meter monitor reliably and wear-free the flow of various different liquid media which feature a determined minimum conductivity.

FCMI-15D12DYA4P-LIUP8X-H1141| 05/27/2020 23-01 | technical changes reserved

Technical data

Process connection	Compression fittings for pipes Ø 15 × 1.5 (EN10305-1)
Programming options	access code, switch-point, N.C./N.O, hysteresis, switch-on/switch-off delay,signal filter

FCMI-15D12DYA4P-LIUP8X-H1141| 05/27/2020 23-01 | technical changes reserved