FCI-D15A4P-LIX-H1141
Flow Monitoring – Inline Sensor with Integrated Processor

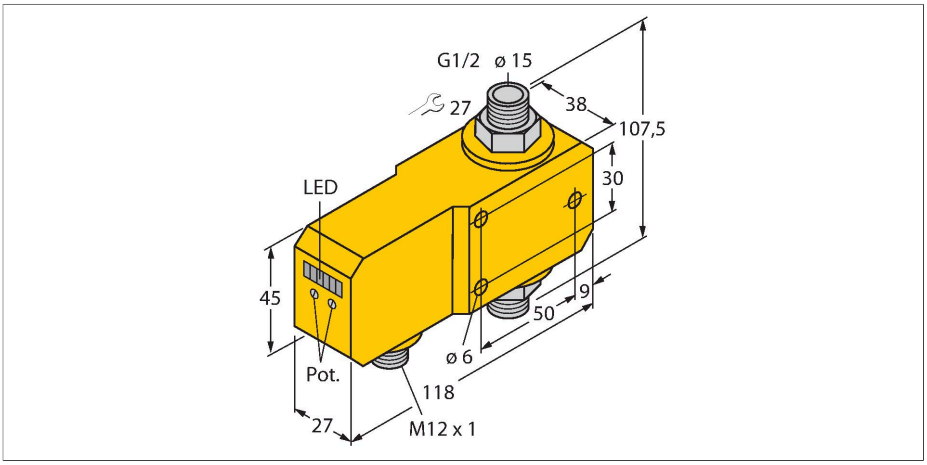

Technical data

ID	6870670
Type	FCI-D15A4P-LIX-H1141
Mounting	Inline sensor
Flow operating range	3…20 l/min
Stand-by time	5…15 s
Setting time	0.5…1 s
Temperature gradient	≤ 400 K/min
Medium temperature	0…+80 °C
Ambient temperature	0…+60 °C
Electrical data	
Operating voltage U_B	21.6…26.4 VDC
Current consumption	≤ 50 mA
Output function	Analog output
Short-circuit protection	yes
Reverse polarity protection	yes
Current output	4…20 mA
Load	200…500 Ω
Protection class	IP67
Mechanical data	
Design	Inline
Housing material	Plastic, PBT
Sensor material	Stainless steel, 1.4571 (AISI 316Ti)
Max. tightening torque of housing nut	30 Nm
Electrical connection	Connector, M12 × 1

Features

- Flow sensor for liquid media
- Calorimetric principle
- Adjustment via potentiometer
- LED band
- Operating range 3…20 l/min
- DC 3-wire, 21.6…26.4 VDC
- 4…20 mA analog output
- Connector device, M12 × 1

Wiring diagram

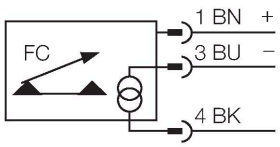

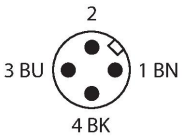

Functional principle

The function of the inline flow sensors is based on the thermo-dynamic principle. Heat is generated in a measuring tube and absorbed by the flowing medium. The transported heat loss is thus a measure of the flow speed. Thus TURCK's wear-free flow sensors reliably monitor the flow of gaseous and liquid media. A low pressure drop and fast response to flow rate variations are the outstanding features of these devices.

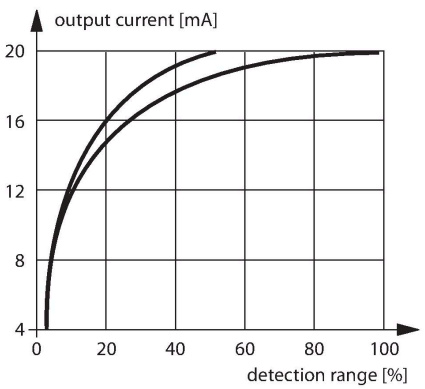

FCI-D15A4P-LIX-H1141| 01/09/2026 22-29 | technical changes reserved

Technical data

Process Pressure	20 bar
Process connection	G 1/2"
Flow state display	LED chain, red (1x), green (5x)
LED display	red = 4 mA 1x green > 4 mA 2x green > 8 mA 3x green > 12 mA 4x green > 16 mA 5x green = 20 mA
Tests/approvals	
Approvals	cULus
UL registration number	E210608

FCI-D15A4P-LIX-H1141| 01/09/2026 22-29 | technical changes reserved