Flow monitoring
Immersion sensor without integrated processor
FCS-50A4-NAEX/D014/D100/D024

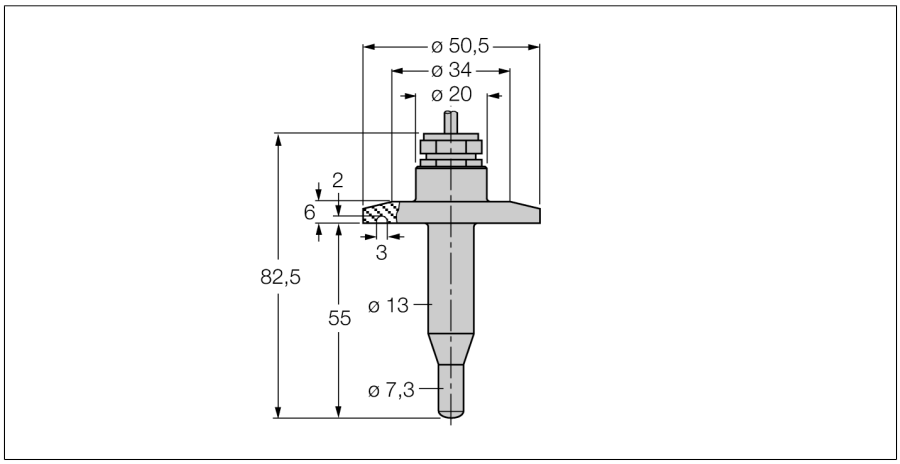

- **ATEX category II 2 G, Ex zone 1**
- **Ex sensor for liquid media**
- **Calorimetric functionality**
- **Adjustment via Ex signal processor**
- **Status displayed via signal processor**
- **Sensor made of A4 stainless steel (1.4404)**
- **Tri-Clamp**
- **3A certificate**
- **Acceptance test certificate 3.1 (EN 10204)**
- **Temperature range 10…120 °C**
- **Cable device**
- **4-wire connection to an Ex0 processor**

Type designation	FCS-50A4-NAEX/D014/D100/D024
Ident-No.	6872053

Mounting	Immersion sensor
Water Operating Range	1…100 cm/s
Oil Operating Range	3…200 cm/s
Stand-by time	typ. 8 s (2…15 s)
Switch-on time	typ. 2 s (1…15 s)
Switch-off time	typ. 2 s (1…15 s)
Temperature jump, response time	max. 12 s
Temperature gradient	≤ 250 K/min
Medium temperature	10…+120 °C

Device marking	Ⓔx II 2 G EEx ib IIC T6
Ignition protection category	Ex ib IIC
PowerP_i	≤ 0.69 W
Internal inductances/capacitances	negligibly small
Ex approval acc. to conformity certificate	TÜV 99 ATEX 1518
Protection class	IP67

Design	Immersion
Housing material	Stainless steel, V4A (1.4404)
Sensor material	Stainless steel, V4A (1.4404)
Max. tightening torque housing nut	30 Nm
Electrical connection	FEP cable, blue
Cable length (L)	2 m
Cable cross section	4 x 0.25 mm²
Pressure resistance	10 bar
Process connection	Tri-Clamp 1 ½"

Wiring Diagram

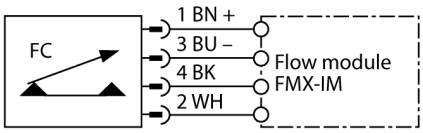

Functional principle

Our insertion - flow sensors operate on the principle of thermodynamics. The measuring probe is heated by several °C as against the flow medium. When fluid moves along the probe, the heat generated in the probe is dissipated. The resulting temperature is measured and compared to the medium temperature. The flow status of every medium can be derived from the evaluated temperature difference. Thus TURCK's wear-free flow sensors reliably monitor the flow of gaseous and liquid media.

Edition • 2019-02-08T13:37:56+01:00

Flow monitoring
Immersion sensor without integrated processor
FCS-50A4-NAEX/D014/D100/D024

Operating manual

Intended use

This device fulfills the directive 2014/34/EC and is suited for use in explosion hazardous areas according to EN 60079-0 and EN 60079-11.
In order to ensure correct operation to the intended purpose it is required to observe the national regulations and directives.

For use in explosion hazardous areas conform to classification

II 2 G (Group II, Category 2 G, electrical equipment for gaseous atmospheres).

Marking (see device or technical data sheet)

Ex II 2 G and EEx ib IIC T6 acc.to EN50020

Installation/Commissioning

These devices may only be installed, connected and operated by trained and qualified staff. Qualified staff must have knowledge of protection classes, directives and regulations concerning electrical equipment designed for use in explosion hazardous areas.
Please verify that the classification and the marking on the device comply with the actual application conditions.

This device is only suited for connection to approved Exi circuits according to EN 60079-0 and EN 60079-11. Please observe the maximum admissible electrical values.
After connection to other circuits the sensor may no longer be used in Exi installations. When interconnected to (associated) electrical equipment, it is required to perform the "Proof of intrinsic safety" (EN60079-14).

Installation and mounting instructions

Avoid static charging of cables and plastic devices. Please only clean the device with a damp cloth. Do not install the device in a dust flow and avoid build-up of dust deposits on the device.
If the devices and the cable could be subject to mechanical damage, they must be protected accordingly. They must also be shielded against strong electro-magnetic fields.
The pin configuration and the electrical specifications can be taken from the device marking or the technical data sheet.
In order to avoid contamination of the device, please remove possible blanking plugs of the cable glands or connectors only shortly before inserting the cable or opening the cable socket.

Service/Maintenance

Repairs are not possible. The approval expires if the device is repaired or modified by a person other than the manufacturer. The most important data from the approval are listed.

Edition • 2019-02-08T13:37:56+01:00