# Mounting Accessories
# Mounting kit for manual valves
# BTS-DSU35-ZF10-M10

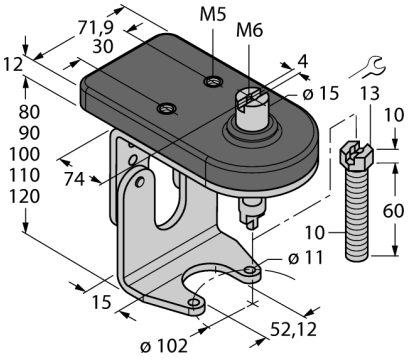


- Mounting kit with mounting plate for dual sensor and actuator (puck)
- For manual valves of the size F10 acc. to ISO 5211 / DIN 3337
- Height-adjustable
- Adjustable shaft peg with self-locking M10 nut
- Robust stainless steel
- Vestamid mounting plate for sensors

**General description**

Dual sensors are especially designed for position detection in rotary actuators. They combine the reliability of non-contact inductive sensors with the flexibility of a modular housing system. A broad range of practice-oriented accessories ensure optimal adaption to your system.

| | |
|---|---|
| Type | BTS-DSU35-ZF10-M10 |
| ID | 6901129 |

| | |
|---|---|
| Design | Accessories for dual sensors, Ni4-DSU35… |
| Dimensions | 104 x 60 x 112 mm |
| Housing material | Plastic, 1.4301 (AISI 304)/Vestamid |

| | |
|---|---|
| Included in delivery | 1x jumper top part F05, 1x jumper bottom part F10, 2x srews DIN933-A2 M6x10, 2x serrated lock washers DIN6798-A6,4-A2, 1x actuator screw M10x60, 1x self-locking nut DIN985-A2 M10 |

Edition • 2025-02-28T15:20:00+01:00