Accessories
Mounting Bracket
For Profile Cylinders
KLQ2

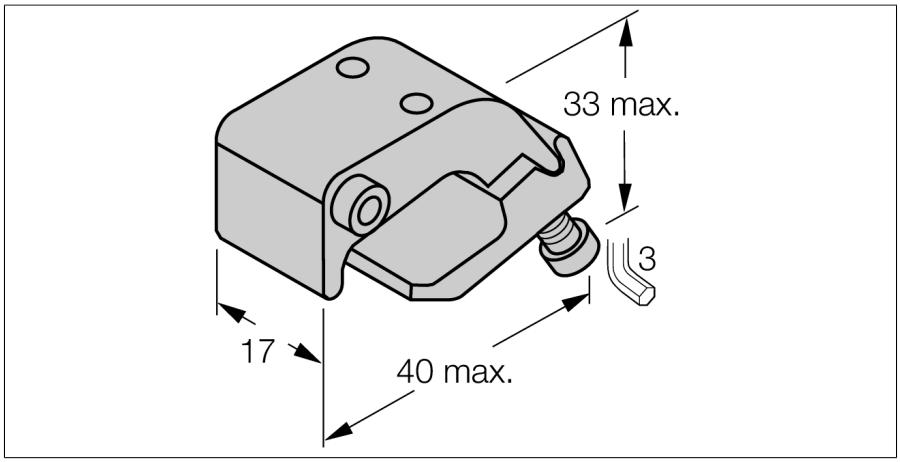

- Mounting on profile cylinders
- Cylinder diameter: 32…50 mm
- Material: Aluminum

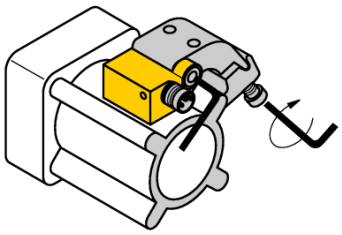

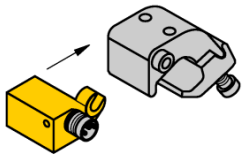

Type	KLQ2
ID	6971902
Design	Accessories, QST
Dimensions	40 x 33 x 17 mm
Housing material	Metal, AL, Anodized
Fixing clamp for correspondent cylinder diameter	50...100 mm
clamping width:	11… 19mm

Edition • 2023-07-21T16:26:30+02:00