BL ident®

Read/write Head
TN902/915-Q175L200-H1147

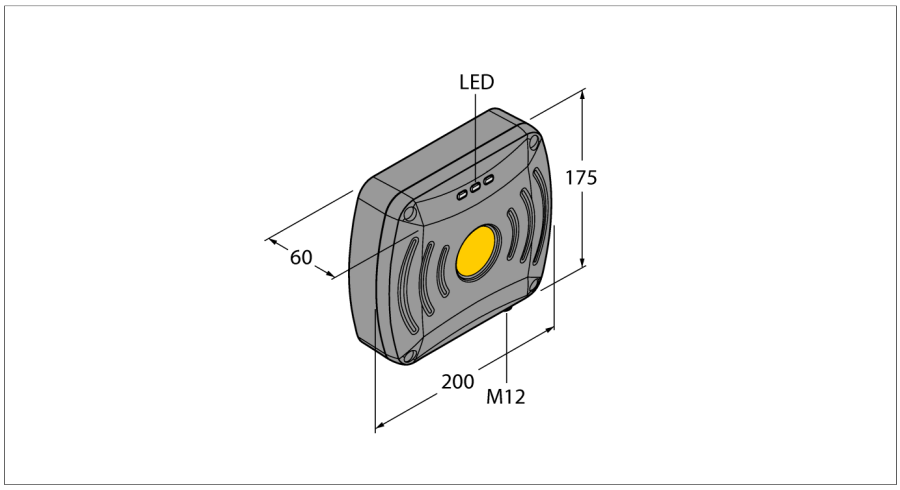

Type designation	TN902/915-Q175L200-H1147
Ident-No.	7030668

Electrical data	
Operating voltage	12…24 VDC
DC rated operational current	≤ 1000 mA
Data transfer	Alternating electromagnetic field
Technology	UHF (860…960 MHz)
Usage region (UHF)	Brazil (902…907.5 + 915…928 MHz)
Radio communication and protocol standards	ISO 18000-63 EPCglobal Gen 2
Output power	1 W (ERP), adjustable
Antenna polarization	RHCP
Antenna HPBW	90°
Output function	4-wire, Read/Write
Fieldbus Protocol	Connection to RFID interface

Mechanical data	
Mounting conditions	Non-flush
Ambient temperature	-20…+50 °C
Design	Rectangular
Dimensions	200x 175x 60mm
Housing material	Aluminium, AL, Silver
Active area material	Plastic, ABS, black
Vibration resistance	55 Hz (1 mm)
Shock resistance	30 g (11 ms)
Protection class	IP67
Electrical connection	Connector, M12 × 1
Power-on indication	LED,Green/Yellow/Red
Diagnostic display	differently adjustable

Packaging unit	1

…/S2503 Connectors

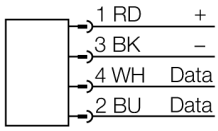

Connector …/S2500

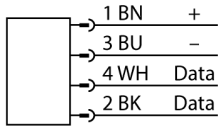

Connector …/S2501

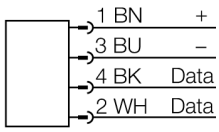

Functional principle

The UHF read/write heads form a transmission zone, the size of which may vary depending on the combination of read/write head and tag used.

The read/write distances only represent standard values measured under laboratory conditions, free from any influences caused by surrounding materials.

Attainable distances may vary due to component tolerances, mounting conditions, ambient conditions and material qualities, especially when mounted in metal.

Testing of the application under real operating conditions is therefore essential, especially with on-the-fly reading and writing!

Due to the higher energy needs of the transponder for a write operation, the range is reduced to approximately 40–60 % of the reading range.

Edition • 2020-01-31T05:05:58+01:00

Accessories

Type code	Ident-No.	Description	Dimension drawing
RH-Q240L280/ Q280L640	7030296	Arm bracket for UHF RFID read/write heads TNxxx-Q175L200-H1147, TNxxx-Q240L280-H1147 and TNxxx-Q280L640-H1147	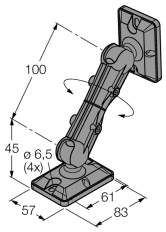

Edition • 2020-01-31T05:05:58+01:00