PKG 3M-x
Actuator and Sensor Cordset – Connection Cable

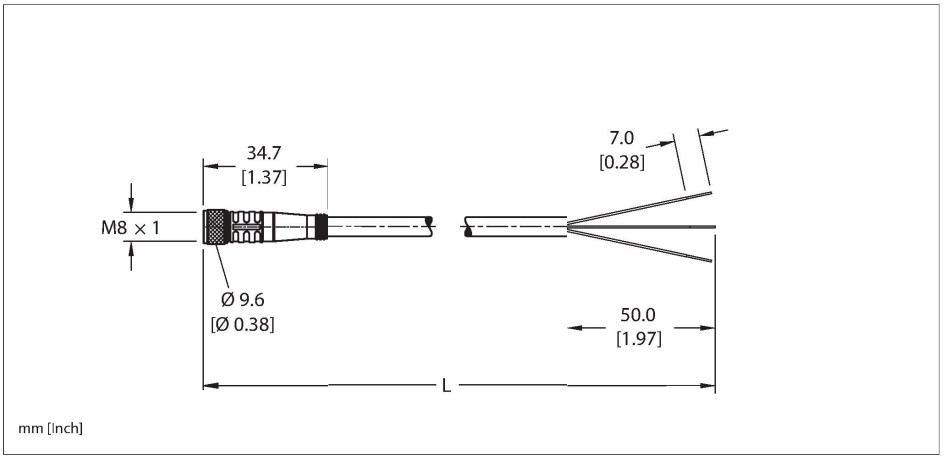

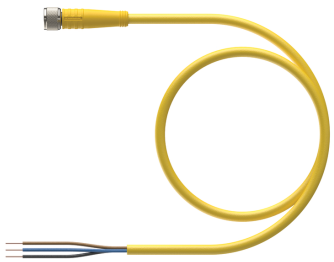

Technical data

Type	PKG 3M-x
ID	777000272
Connector A	Female, M8 × 1, Straight
Design specification	Acc. to IEC 61076-2-104
Number of contacts	3
Contacts	Brass, CuZn, Gold-plated
Contact carriers	Plastic, Nylon or TPU, Black
Connector body	Plastic, TPU, Yellow
Coupling nut	Brass, CuZn, Nickel-plated
Connector seal	O-ring, Plastic, FKM/FPM
Tightening torque (range)	0.4 … 0.8 Nm (note max. torque of mating connector!)
Mechanical life	> 100 Mating cycles
Pollution degree	3
Protection class (When coupled)	IP68
	NEMA: 1, 3, 4, 6P
Cable data	
Cable ID	RF50642
Total number of conductors	3
Cable diameter	Ø 4.39 mm
Cable jacket	PVC, Yellow
Conductor diameter	0.044 "
Conductor material	TC (tinned copper)
Conductor insulation material	PVC
Conductor size	3 x 24 AWG [Similar to 0.25 mm²]

Features

- M8, Female, Straight, 3-pin
- Threaded Connector
- General Purpose Cable
- Yellow PVC jacket, 3X24 AWG
- -40 Cold Bend Rating
- Flame Ratings: UL1061, CSA FT1

Cable cross section

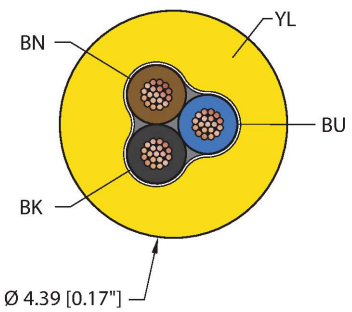

Contact assignment

PKG 3M-x | 06/07/2023 05-16 | technical changes reserved

Technical data

Number of strands x O.D.	19 x 36 AWG
Conductor colors	BN, BU, BK
Electrical properties at +20 °C	
Rated voltage	125 VAC/DC
Current	4 A
Mechanical and chemical properties	
Bending radius (static)	≥ 5 x Ø
Bending radius (dynamic)	≥ 10 x Ø
UL cold bend rating	-40 °C
Ambient temperature range (static)	-40 °C…+105 °C
Ambient temperature range (dynamic)	5 °C…+105 °C
Temperature range (installation)	-10 °C…+105 °C
Approval	
Approvals	UL 2238 CSA C22.2 No. 182.3 CE UKCA RoHS
Note	
	- Flex ratings may be reduced if used in extreme temperatures, exposure to certain chemicals, operating above the rated cycle speed, or operating below the rated cable bend radius.
	- We reserve the right to make technical alterations without prior notice.

Connector A

Circuit Diagram

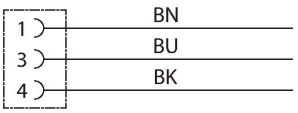

PKG 3M-x | 06/07/2023 05-16 | technical changes reserved