RKF 46-xM
Actuator and Sensor Receptacle – Front Mount

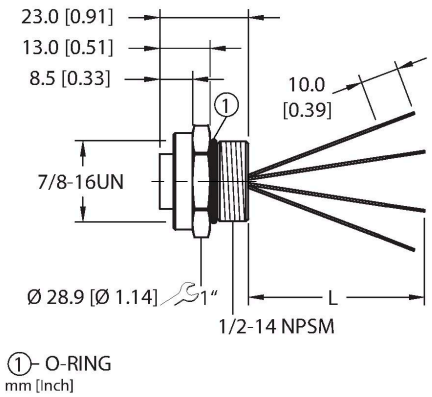

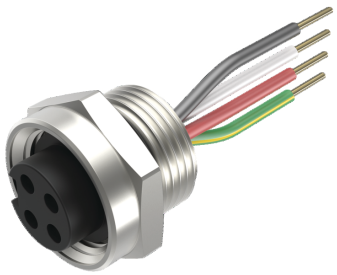

Technische Daten

Type	RKF 46-xM
ID	777003071
Connector A	Female, 7/8"-16 UN
Number of contacts	4
Contacts	Brass, CuZn, Gold-plated
Contact carriers	Plastic, TPU, Black
Housing material/finish	Brass, CuZn, Nickel-plated
Tightening torque (range)	0.8 … 2 Nm (note max. torque of mating connector!)
Mounting orientation	Front mount
Panel seal	O-ring, Plastic, NBR
Mounting thread	1/2"-14 NPSM
Receptacle mounting torque	6.8…27.1 Nm
Mechanical life	> 100 Mating cycles
Pollution degree	3
Protection class (When coupled)	IP67, IP68, IP69, IP69K
	NEMA: 1, 3, 4, 6P, 12
Total number of conductors	4
Conductor material	TC (tinned copper)
Conductor insulation material	PVC
Conductor size	16 AWG [Similar to 1.50 mm²]
Conductor colors	BK, WH, RD, GN/YE
Electrical properties at +20 °C	
Rated voltage	600 V

Features

- 7/8" minifast, Female, Receptacle, 4-pin
- Mounting thread: 1/2"-14 NPSM

Contact assignment

Connector A

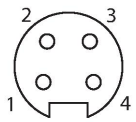

Circuit Diagram

Technische Daten

Current	10 A
Mechanical and chemical properties	
Ambient temperature range (static)	-40…+105 °C
Approvals	UL 2238 CSA C22.2 No. 182.3 CE RoHS
Note	
	- We reserve the right to make technical alterations without prior notice.
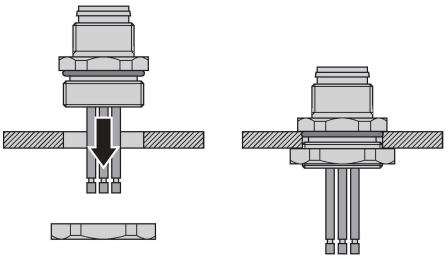
Front panel mounting