excom I/O System
Upstream Subrack for PPSA
MT-PPS

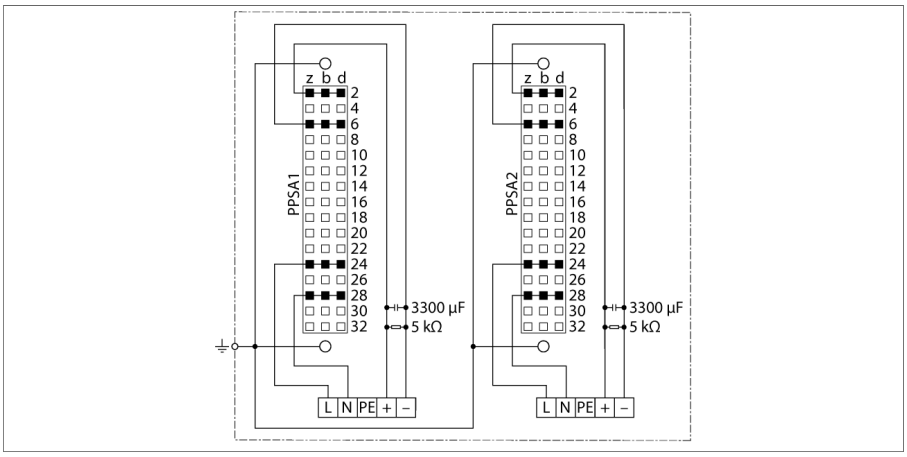

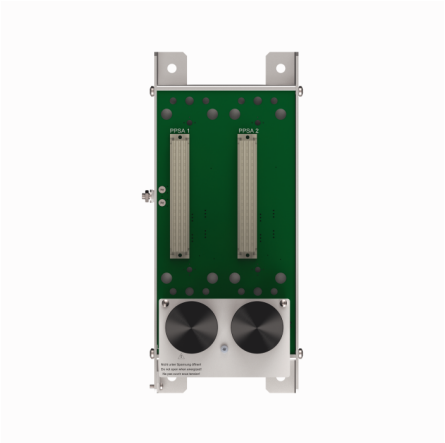

The module rack MT-PPS consists of a backplane and the actual rack system. It can accommodate two AC converters for the supply of downstream connected 24 VDC module racks.

To plug and unplug AC converters power has to be switched off first. (Do not work on connecting terminals prior to removing the AC converters).

The module rack is designed in a combined protection rating of Ex e and Ex q and can therefore be used in zone 1.

The rack system is made of continuously cast aluminum. This ensures increased stability and shielding. The module rack is suited for switch cabinet and rack mounting.

- Upstream connected subrack for up to 2 AC/DC converters

Edition • 2025-02-28T15:33:28+01:00

Type	MT-PPS
ID	9100516
Ex approval acc. to conformity certificate	IECEx PTB 16.0031U
Ex approval acc. to conformity certificate	PTB 16 ATEX 2025 U
Device designation	Ⓔx II 2 G Ex eb IIC
Slots	
AC converter	2
Housing material	Aluminium, extrusion profile
Connection mode	Mounting panel
Protection class	IP20
Ambient temperature	-20…+70 °C
Relative humidity	≤ 93 % at 40 °C acc. to IEC 60068-2-78
Vibration test	Acc. to IEC 60068-2-6
Shock test	Acc. to IEC 60068-2-27
EMC	Acc. to EN 61326-1 Acc. to Namur NE21
MTTF	1211 years acc. to SN 29500 (Ed. 99) 40 °C
Dimensions	110 x 260 x 130 mm
Approvals	ATEX cFMus cFM IECEx CCC KOSHA EAC Ex LR KR DNV GL UKCA CE

Dimensions

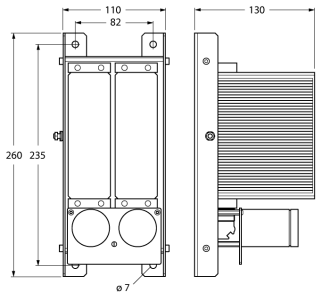

Edition • 2025-02-28T15:33:28+01:00