TTM150C-206A-CF-LI6-H1140-L300
Temperature Detection – With Current Output

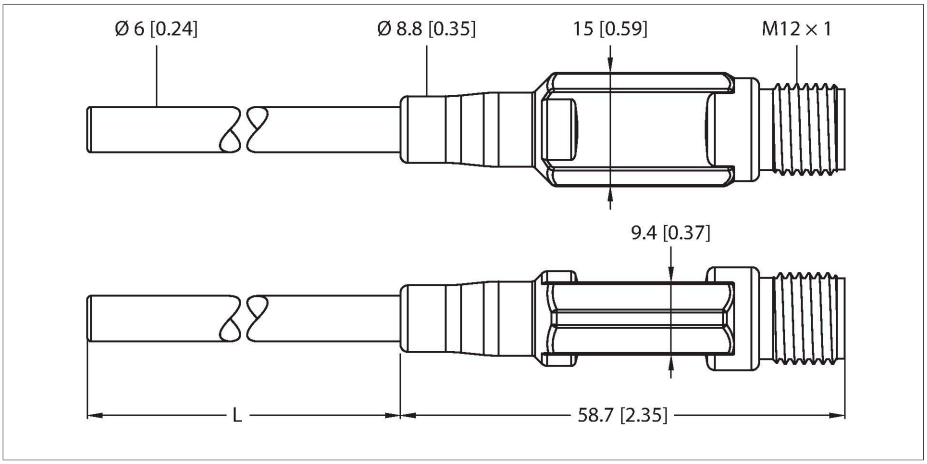

Features

- Miniature design
- Analog output 4…20 mA
- Factory setting 0…150 °C (other settings on request)
- Compression fitting process connection
- Bendable probe (min. bending radius: 3x outer diameter; excluding 30-mm probe tip)

Wiring diagram

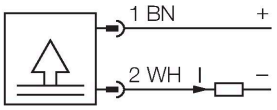

Technical data

Type	TTM150C-206A-CF-LI6-H1140-L300
Ident. no.	9910561
Temperature range	
Measuring range	0…150 °C
Temperature operating range	32…302 °F
Note	Max. temperature of electronics: 80 °C/176 °F
Measuring element	Pt-1000 probe, DIN EN 60751, class A
Response time	t 0.5 = 6 s / t 0.9 = 15 s in water at 0.2 m/s
Immersion depth (L)	300 mm
Power supply	
Operating voltage	10…24 VDC
Current consumption	≤ 20 mA
Short-circuit/reverse polarity protection	yes / yes
Protection type and class	IP67 / III
Outputs	
Output 1	Analog output
Output function	Analog output
Analog output	
Current output	4…20 mA
Load	≤ 0.7 kΩ
Accuracy (Lin. + Hys. + Rep.)	± 0.2 K
Temperature behaviour	
Temperature coefficient zero point Tk0	± 0.1 % of full scale/10 K

Functional principle

Temperatures are recorded over a mineral insulated transmitter and converted into a wide range of electrical output signals.
The devices of the TTM miniature series are enclosed in a fully potted plastic housing and depending on the variant, they have either an IO-link output, power output and/or switching output.

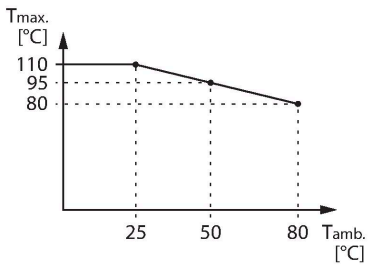

TTM150C-206A-CF-LI6-H1140-L300 12/05/2019 12-11 | technical changes reserved

Technical data

Temperature coefficient span T_{ks}	± 0.1 % of full scale/10 K
Ambient conditions	
Ambient temperature	-40…+80 °C
Storage temperature	-40…+80 °C
Housing	
Housing material	Stainless-steel/Plastic, V4A (1.4404)
Sensor material	Stainless steel, V4A (1.4404)
Process connection	For compression fittings, thermowell or direct mounting
Electrical connection	Connector, M12 × 1
Process Pressure	100 bar
Reference conditions acc. to IEC 61298-1	
Temperature	15…+25 °C
Atmospheric pressure	860…1060 hPa abs.
Humidity	45…75 % rel.
Auxiliary power	24 VDC

TTM150C-206A-CF-LI6-H1140-L300 12/05/2019 12-11 | technical changes reserved

Accessories

Wiring accessories

Dimension drawing	Type	Ident. no.	
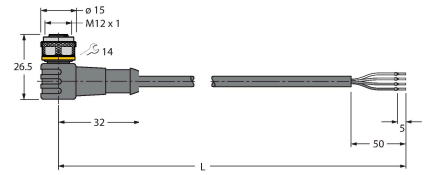	**WKC4.4T-2/TEL**	**6625025**	Connection cable, female M12, angled, 4-pin, cable length: 2 m, sheath material: PVC, black; cULus approval; other cable lengths and qualities available, see www.turck.com
	**RKC4.4T-2/TEL**	**6625013**	Connection cable, female M12, straight, 4-pin, cable length: 2 m, sheath material: PVC, black; cULus approval; other cable lengths and qualities available, see www.turck.com
	**RKC4.4T-2/TXL**	**6625503**	Connection cable, female M12, straight, 4-pin, cable length: 2 m, sheath material: PUR, black; cULus approval; other cable lengths and qualities available, see www.turck.com
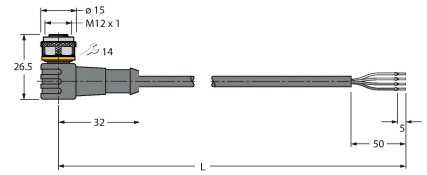	**WKC4.4T-2/TXL**	**6625515**	Connection cable, female M12, angled, 4-pin, cable length: 2 m, sheath material: PUR, black; cULus approval; other cable lengths and qualities available, see www.turck.com
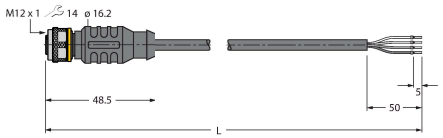	**RKC4.4T-P7X2-10/TXL**	**6626184**	Connection cable, female M12, angled, 4-pin, cable length: 10m, sheath material: PUR, black; cULus approval; other cable lengths and qualities available, see www.turck.com

Accessories

TTM150C-206A-CF-LI6-H1140-L300 12/05/2019 12-11 | technical changes reserved