TTMS-103A-G1/8-LIUPN-H1140-L024
Temperature Detection – Stainless Steel Transmitter with Integrated Probe

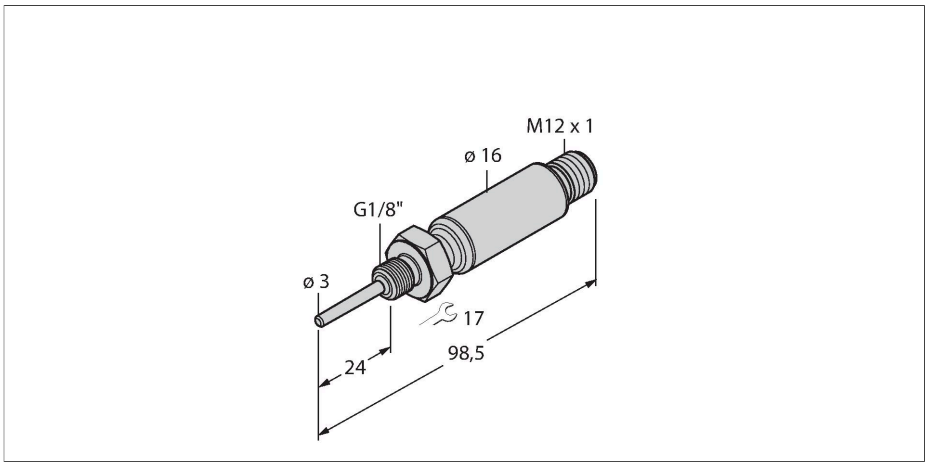

Features

- Miniature design
- Factory setting 0…150 °C
- Parameterizable via IO-Link
- Analog output 4…20 mA (2-wire)
- Switching output
- Process connection G1/8" male thread

Wiring diagram

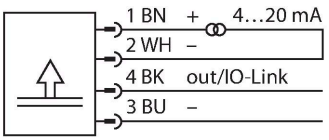

Technical data

Type	TTMS-103A-G1/8-LIUPN-H1140-L024
Ident. no.	9910652
Temperature range	
Measuring range	-50…120 °C
Temperature operating range	-58…248 °F
Factory setting	0…150 °C
	32…302 °F
Accuracy	0.15 °C + 0.002 •|t| (-30 …350 °C)
Measuring element	Pt-100 probe, DIN EN 60751, class A
Response time	t 0.5 = 1.5 s / t 0.9 = 6.0 s in water at 0.2 m/s
Immersion depth (L)	24 mm
Power supply	
Operating voltage	15…30 VDC
Current consumption	≤ 20 mA
Voltage drop at I_e	≤ 2 V
Short-circuit/reverse polarity protection	yes / yes
Protection type and class	IP67 / III
Outputs	
Output 1	Switching output or IO-Link mode
Output 2	analog output

Functional principle

All devices of the miniature transmitter series TTMS are made of stainless steel 1.4404 (AISI 316L). They are available with integrated probe or with M12 probe connection.
Due to the integrated electronics, the limited temperature range must be observed, especially in the area of the M12 connector. Furthermore, the devices feature a current output (2-wire, 4…20 mA), a switching output and communication via IO-Link.

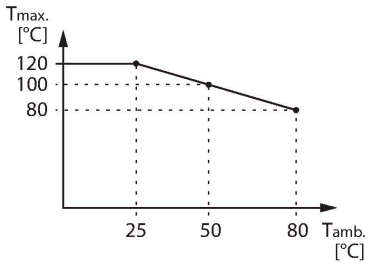

TTMS-103A-G1/8-LIUPN-H1140-L024| 09/24/2020 04-30 | technical changes reserved

Technical data

Switching output	
Communication protocol	IO-Link
Output function	NO/NC programmable, PNP/NPN
Switching point accuracy	± 0.3 K
Rated operational current	0.15 A
Switching cycles	≥ 100 mil.
Release position	-210…+640 °C
Switching point	-200…+650 °C
Analog output	
Current output	4…20 mA
Load	≤ [(Vsupply - 10 V)/21 mA] kΩ
Accuracy (Lin. + Hys. + Rep.)	± 0.3 K
Remark	0.1 % of full scale applies to temperatures > +300 °C
Repeatability	0.1 K
IO-Link	
IO-Link specification	Specified acc. to version 1.1
Programming	FDT / DTM
Transmission physics	corresponds to 3-wire physics (PHY2)
Transmission rate	COM 2 / 38.4 kbps
Process data width	16 bit
Measured value information	15 bit
Switchpoint information	1 bit
Frame type	2.2
Genauigkeit	± 0.2 K
Included in the SIDI GSDML	Yes
Temperature behaviour	
Temperature coefficient zero point Tk0	± 0.1 % of full scale/10 K
Temperature coefficient span T_{kS}	± 0.1 % of full scale/10 K
Ambient conditions	
Ambient temperature	-40…+80 °C
Storage temperature	-40…+80 °C
Housing	
Housing material	Stainless steel, 1.4404 (AISI 316L)
Sensor material	Stainless steel, 1.4404 (AISI 316L)
Process connection	G1/8" male thread
Process Pressure	100 bar
Electrical connection	Connector, M12 × 1

TTMS-103A-G1/8-LIUPN-H1140-L024| 09/24/2020 04-30 | technical changes reserved

Technical data

Reference conditions acc. to IEC 61298-1	
Temperature	15…+25 °C
Atmospheric pressure	860…1060 hPa abs.
Humidity	45…75 % rel.
Auxiliary power	24 VDC
MTTF	541 years acc. to SN 29500 (Ed. 99) 40 °C

TTMS-103A-G1/8-LIUPN-H1140-L024| 09/24/2020 04-30 | technical changes reserved