TTM-206.35A-CF-LIUPN-H1140-L150
Temperature Detection – With Current Output and PNP/NPN Transistor Switching Output

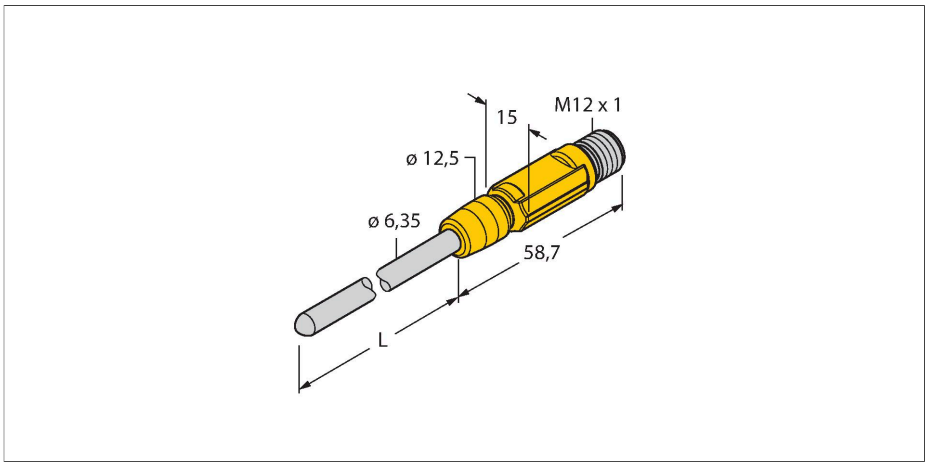



Technical data

Type	TTM-206.35A-CF-LIUPN-H1140-L150
ID	9910827
Temperature range	
Measuring range	-210…650 °C
Measuring range	-346…1202 °F
Factory setting	0…150 °C
	32…302 °F
Accuracy	±0.15 K + 0.002 •|t| (-30…300 °C)
Measuring element	Pt-100 probe, DIN EN 60751, class A
Response time	t_{05} = 1.5 s / t_{09} = 6.0 s in water @ 0.2 m/s
Immersion depth (L)	150 mm
Process Pressure	100 bar
Power supply	
Operating voltage	15…30 VDC
Current consumption	≤ 20 mA
Short-circuit/reverse polarity protection	yes / yes
Insulation class	III
Outputs	
Output 1	Switching output or IO-Link mode
Output 2	Analog output
Switching output	
Communication protocol	IO-Link
Output function	NO/NC programmable, PNP/NPN

Features

- Miniature design
- Parameterizable via IO-Link
- Analog output 4…20 mA (2-wire)
- Switching output
- Probe with ¼-inch outer diameter
- Bendable probe (min. bending radius: 3x outer diameter; excluding 30-mm probe tip)

Wiring diagram

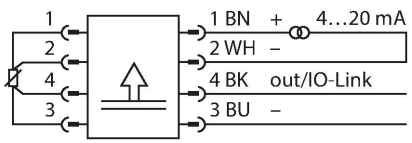

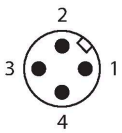

Functional principle

The TTM miniature transmitters are available with integrated probe.
Due to the integrated electronics, the limited temperature range must be observed, especially in the area of the M12 connector.

TTM-206.35A-CF-LIUPN-H1140-L150| 06/06/2023 09-37 | technical changes reserved

Technical data

Switching point accuracy	± 0.3 K
Rated operational current	0.15 A
Release position	-210…+640 °C
Switching point	-200…+650 °C
Switching cycles	≥ 100 mil.
Analog output	
Current output	4…20 mA
Load	≤ [(Vsupply - 10 V)/21 mA] kΩ
Accuracy (Lin. + Hys. + Rep.)	± 0.3 K
Remark	0.1 % of full scale applies to temperatures > +300 °C
Repeatability	0.1 K
IO-Link	
IO-Link specification	V 1.1
Transmission physics	corresponds to 3-wire physics (PHY2)
Frame type	2.2
Transmission rate	COM 2 / 38.4 kbps
Process data width	16 bit
Measured value information	15 bit
Switchpoint information	1 bit
Programming	FDT / DTM
Genauigkeit	± 0.2 K
Included in the SIDI GSDML	Yes
Mechanical data	
Housing material	Stainless-steel/Plastic, 1.4404 (AISI 316L)
Process connection	For compression fittings, thermowell or direct mounting
Electrical connection	Connector, M12 × 1
Protection class	IP67
Environmental conditions	
Ambient temperature	-40…+80 °C
Storage temperature	-40…+80 °C
Tests/approvals	
Reference conditions acc. to IEC 61298-1	
Temperature	15…+25 °C
Atmospheric pressure	860…1060 hPa abs.
Humidity	45…75 % rel.

TTM-206.35A-CF-LIUPN-H1140-L15Q 06/06/2023 09-37 | technical changes reserved

Technical data

Auxiliary power	24 VDC
Temperature behaviour	
Temperature coefficient range TK_s	± 0.1 % of full scale/10 K
Temperature coefficient zero point TK_0	± 0.1 % of full scale/10 K
MTTF	541 years acc. to SN 29500 (Ed. 99) 40 °C

Technical data

Type	TTM-206.35A-CF-LIUPN-H1140-L150
ID	9910827
Temperature range	
Measuring range	-210…650 °C
Measuring range	-346…1202 °F
Factory setting	0…150 °C
	32…302 °F
Note	Max. temperature of electronics: 80 °C/176 °F
Accuracy	±0.15 K + 0.002 •|t| (-30…300 °C)
Measuring element	Pt-100 probe, DIN EN 60751, class A
Response time	t_{05} = 1.5 s / t_{09} = 6.0 s in water @ 0.2 m/s
Immersion depth (L)	150 mm
Outer diameter	6.35 mm
Power supply	
Operating voltage	15…30 VDC
Current consumption	≤ 20 mA
Voltage drop at I_e	≤ 2 V
Short-circuit/reverse polarity protection	yes / yes
Protection type and class	IP67 / III
Outputs	
Output 1	Switching output or IO-Link mode
Output 2	Analog output
Switching output	
Communication protocol	IO-Link
Output function	NO/NC programmable, PNP/NPN
Note	Connection to PIN 1+3+4. Please use a 3-wire cable for operation on a Turck TBEN IO-Link master.
Switching point accuracy	± 0.3 K
Rated operational current	0.15 A
Switching cycles	≥ 100 mil.

TTM-206.35A-CF-LIUPN-H1140-L150| 06/06/2023 09-37 | technical changes reserved

Technical data

Release position	-210…+640 °C
Switching point	-200…+650 °C
Analog output	
Current output	4…20 mA
Note	Connection to PIN 1+2
Load	≤ [(Vsupply - 10 V)/21 mA] kΩ
Accuracy (Lin. + Hys. + Rep.)	± 0.3 K
Remark	0.1 % of full scale applies to temperatures > +300 °C
Repeatability	0.1 K
IO-Link	
IO-Link specification	V 1.1
Programming	FDT / DTM
Transmission physics	corresponds to 3-wire physics (PHY2)
Transmission rate	COM 2 / 38.4 kbps
Process data width	16 bit
Measured value information	15 bit
Switchpoint information	1 bit
Frame type	2.2
Genauigkeit	± 0.2 K
Included in the SIDI GSDML	Yes
Temperature behaviour	
Temperature coefficient zero point TK_0	± 0.1 % of full scale/10 K
Temperature coefficient range TK_s	± 0.1 % of full scale/10 K
Environmental conditions	
Ambient temperature	-40…+80 °C
Storage temperature	-40…+80 °C
Mechanical data	
Housing material	Stainless-steel/Plastic, 1.4404 (AISI 316L)
Sensor material	Stainless steel, 1.4404 (AISI 316L)
Process connection	For compression fittings, thermowell or direct mounting
Process Pressure	100 bar
Electrical connection	Connector, M12 × 1
Reference conditions acc. to IEC 61298-1	
Temperature	15…+25 °C
Atmospheric pressure	860…1060 hPa abs.

TTM-206.35A-CF-LIUPN-H1140-L15Q 06/06/2023 09-37 | technical changes reserved

Technical data

Humidity	45…75 % rel.
Auxiliary power	24 VDC
Tests/approvals	
MTTF	541 years acc. to SN 29500 (Ed. 99) 40 °C

TTM-206.35A-CF-LIUPN-H1140-L150 06/06/2023 09-37 | technical changes reserved