GSDA GKDA 40-46M/S4000
Powerfast™ Cordset – Extension Cable

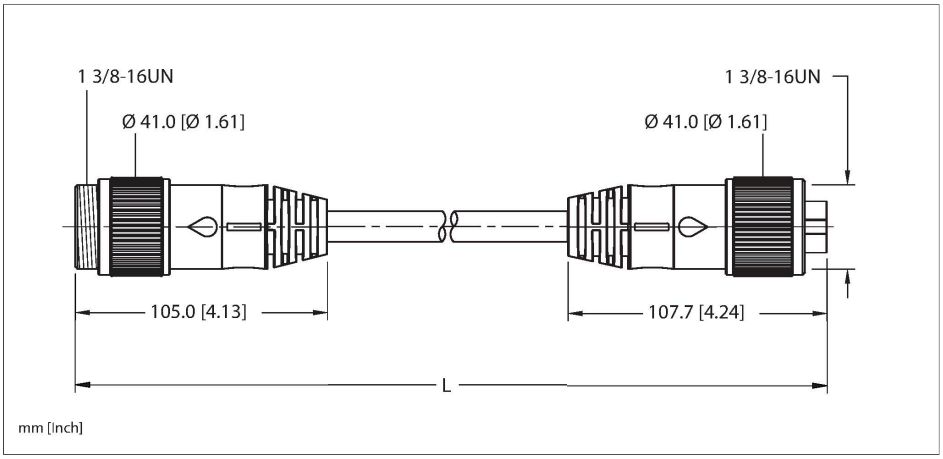



Technical data

Type	GSDA GKDA 40-46M/S4000
ID	U-54729
Special version	S4000 = TC-ER cable
Connector A	Male, 1 3/8"-16 UN, Straight
Number of contacts	4
Contacts	Brass, CuZn, Gold-plated
Contact carriers	Plastic, PVC, Black
Connector body	Plastic, PVC, Black
Coupling nut	Aluminum, Anodized
Tightening torque	4 Nm
Protection class (When coupled)	IP67, IP68, IP69, IP69K
	NEMA: 1, 3, 4, 6P
Connector B	Female, 1 3/8"-16 UN, Straight
Number of contacts	4
Contacts	Brass, CuZn, Gold-plated
Contact carriers	Plastic, PVC, Black
Connector body	Plastic, PVC, Black
Coupling nut	Aluminum, Anodized
Tightening torque	4 Nm
Protection class (When coupled)	IP67, IP68, IP69, IP69K
	NEMA: 1, 3, 4, 6P
Cable data	
Cable ID	RF51743
Total number of conductors	4

Features

- 1-3/8” Male, Straight, 4-pin
- 1-3/8” Female, Straight, 4-pin
- Power Tray/Exposed Run/Direct Burial Cable
- Black PVC jacket, 4X10 AWG
- Sunlight Resistant
- -40 Cold Bend Rating
- Oil Resistant
- Flame Ratings: UL 1685 FT4, UL 1061, CSA FT1, CSA FT4

Cable cross section

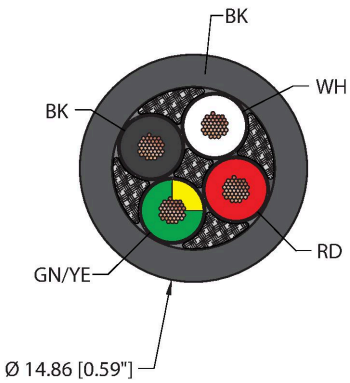

Contact assignment

GSDA GKDA 40-46M/S4000| 06/17/2026 15-49 | technical changes reserved

Technical data

Cable diameter	Ø 14.86 mm
Length (L)	46 m
Cable jacket	PVC, Black
Conductor diameter	0.186 "
Conductor material	BC (bare copper)
Conductor insulation material	PVC
Conductor size	4 x 10 AWG [Similar to 6.00 mm²]
Number of strands x O.D.	105 x 30 AWG
Conductor colors	WH, RD, GN/YE, BK
Electrical properties at +20 °C	
Rated voltage	600 V
Current	35 A
Mechanical and chemical properties	
Bending radius (static)	≥ 5 x Ø
Bending radius (dynamic)	≥ 10 x Ø
UL cold bend rating	-40 °C
Ambient temperature range (static)	-40…+90 °C
Ambient temperature range (dynamic)	-40…+90 °C
Temperature range (installation)	-20…+90 °C
Approval	
Approvals	UL 2237 CE RoHS
Note	
	- CAUTION: RISK OF ELECTRICAL SHOCK. DO NOT DISCONNECT UNDER LOAD.
	- Flex ratings may be reduced if used in extreme temperatures, exposure to certain chemicals, operating above the rated cycle speed, or operating below the rated cable bend radius.
	- We reserve the right to make technical alterations without prior notice.

Connector A

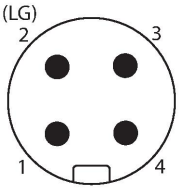

Connector B

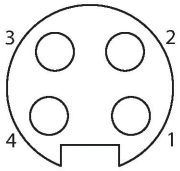



GSDA GKDA 40-46M/S4000| 06/17/2026 15-49 | technical changes reserved