RSM RKM 34-13M
Power Cordset – Extension Cable

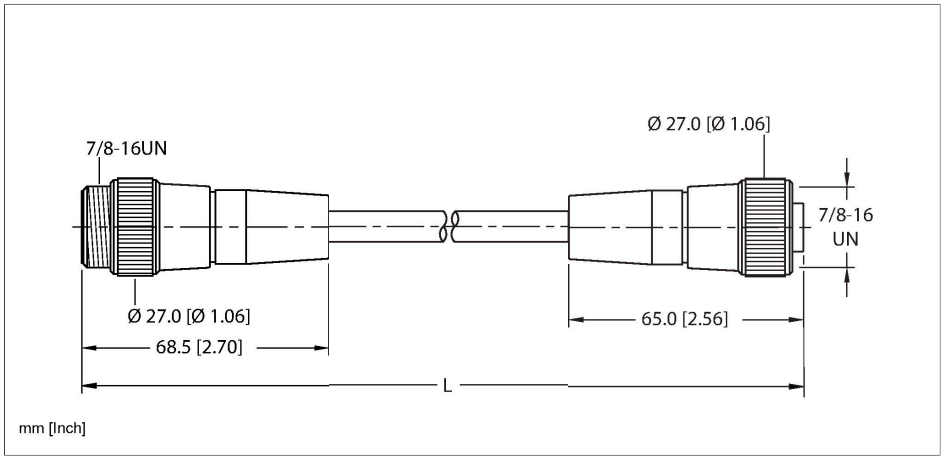

Technical data

Type	RSM RKM 34-13M
ID	U-68224
Connector A	Male, 7/8"-16 UN, Straight
Number of contacts	3
Contacts	Brass, CuZn, Gold-plated
Contact carriers	Plastic, PVC, Black
Connector body	Plastic, PVC, Black
Coupling nut	Brass, CuZn, Nickel-plated
Tightening torque	2 Nm
Mechanical life	> 100 Mating cycles
Pollution degree	3
Protection class (When coupled)	IP67, IP68, IP69, IP69K
	NEMA: 1, 3, 4, 6P, 12
Connector B	Female, 7/8"-16 UN, Straight
Number of contacts	3
Contacts	Brass, CuZn, Gold-plated
Contact carriers	Plastic, PVC, Black
Connector body	Plastic, PVC, Black
Coupling nut	Brass, CuZn, Nickel-plated
Tightening torque	2 Nm
Mechanical life	> 100 Mating cycles
Pollution degree	3
Protection class (When coupled)	IP67, IP68, IP69, IP69K
	NEMA: 1, 3, 4, 6P, 12

Features

IP67/IP68 IP69/IP69K DEGREE OF PROTECTION

- 7/8” Male, Straight, 3-pin
- 7/8" Female, straight, 3-pin
- Power Tray/Exposed Run/Direct Burial Cable
- Black TPE jacket, 3X14 AWG
- Sunlight Resistant
- -40 Cold Bend Rating
- Oil Resistant
- Flame Ratings: UL 1685 FT4, UL 1100, CSA FT1, CSA FT4

Cable cross section

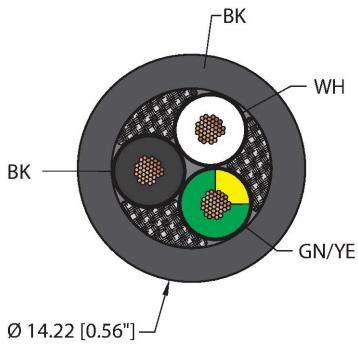

Contact assignment

RSM RKM 34-13M| 03/30/2026 23-18 | technical changes reserved

Technical data

Cable data	
Cable ID	RF51671
Total number of conductors	3
Cable diameter	Ø 14.22 mm
Length (L)	13 m, (+50mm or 4% of length/-0.0, Whichever is greater)
Cable jacket	TPE, Black
Conductor diameter	0.177 "
Conductor material	BC (bare copper)
Conductor insulation material	PVC/Nylon (Nylon overcoat)
Conductor size	3 x 14 AWG [Similar to 2.50 mm²]
Number of strands x O.D.	41 x 30 AWG
Conductor colors	GNYE, BK, WH
Electrical properties at +20 °C	
Rated voltage	600 V
Current	21 A
Mechanical and chemical properties	
Bending radius (static)	≥ 5 x Ø
Bending radius (dynamic)	≥ 10 x Ø
UL cold bend rating	-40 °C
Ambient temperature range (static)	-40…+90 °C
Ambient temperature range (dynamic)	5…+90 °C
Temperature range (installation)	-10…+90 °C
Approval	
Approvals	UL 2237
Note	
	- CAUTION: RISK OF ELECTRICAL SHOCK. DO NOT DISCONNECT UNDER LOAD.
	- Flex ratings may be reduced if used in extreme temperatures, exposure to certain chemicals, operating above the rated cycle speed, or operating below the rated cable bend radius.
	- We reserve the right to make technical alterations without prior notice.

Connector A Connector B

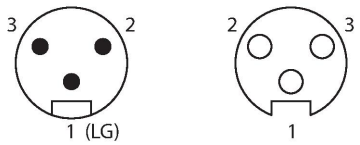

Circuit Diagram

RSM RKM 34-13M| 03/30/2026 23-18 | technical changes reserved