FSFD 8-2
Actuator and Sensor Receptacle – Rear Mount

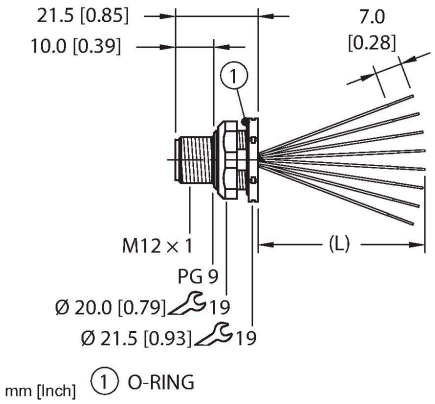

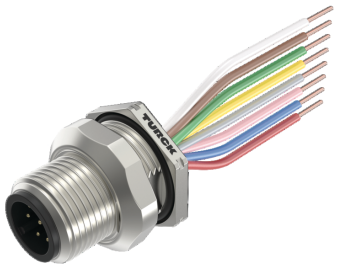

Technical data

Type	FSFD 8-2
ID	U0954-55
Connector A	Male, M12 × 1, A-code
Design specification	Acc. to IEC 61076-2-101
Number of contacts	8
Contacts	Brass, CuZn, Gold-plated
Contact carriers	Plastic, Nylon or TPU, Black
Housing material/finish	Brass, CuZn, Nickel-plated
Tightening torque (range)	0.4 … 1.8 Nm (note max. torque of mating connector!)
Mounting orientation	Rear mount
Panel seal	O-ring, Plastic, NBR
Mounting thread	PG9
Locknut	Brass, CuZn, Nickel-plated
Receptacle mounting torque	2.5…6.8 Nm
Mechanical life	> 100 Mating cycles
Pollution degree	3
Protection class (When coupled)	IP68
	NEMA: 1, 3, 4, 6P
Total number of conductors	8
Length (L)	2 m
Conductor material	TC (tinned copper)
Conductor insulation material	PVC
Conductor size	24 AWG [Similar to 0.25 mm²]

Features

- M12, Male, Receptacle, 8-pin
- Mounting thread: PG9

Contact assignment

Connector A

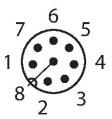

Circuit Diagram

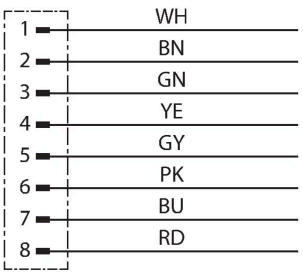

Technical data

Conductor colors	WH, BN, GN, YE, GY, PK, BU, RD
Electrical properties at +20 °C	
Rated voltage	60 V_{AC}/75 V_{DC}
Current	3 A
Mechanical and chemical properties	
Ambient temperature range (static)	-40…+105 °C
Approvals	UL 2238 CE UKCA RoHS
Note	
	- We reserve the right to make technical alterations without prior notice.

Mounting hole - Through

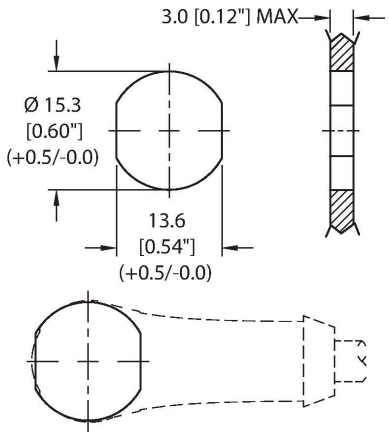

Mounting hole - Threaded

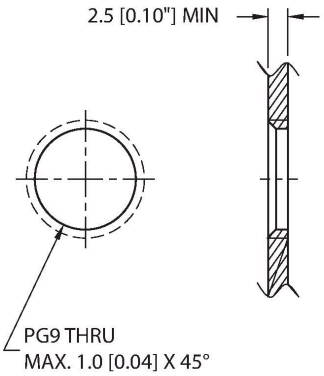

Rear-mounted

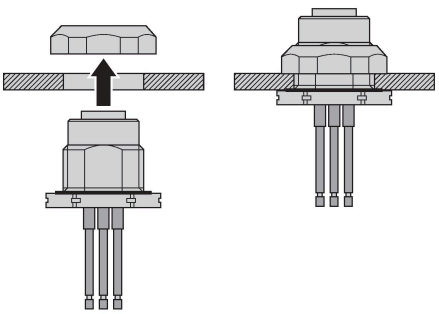

Accessories

FK(S)FD-TOOL	A2550

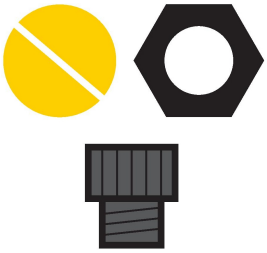

Tool, knockout hole punch, receptacle-mounting hole. Accommodates PG9 threads.

DECAL,9-CLRS,RECEPT+BOXES,EURO(QTY1)	100008955

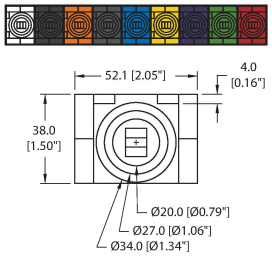

1 decal sticker containing 9 different color sets of 11 decals to color code a sensor, junction block port, cable end, or receptacle. 5ct 4x9mm rectangles, 4ct 8x19mm rectangles, 1ct 27mm ID ring, 1ct 20mm ID ring.

Accessories

LOCKNUT-PG9-BRASS-(10/BAG)	100016624

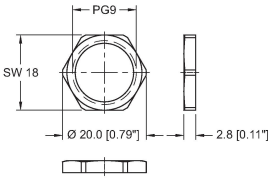

Locknut, PG9, Brass, Nickel-plated, 10 per bag