P-RKFV 40D-1/14.5/NPT
Hazardous Location Receptacle – Front Mount

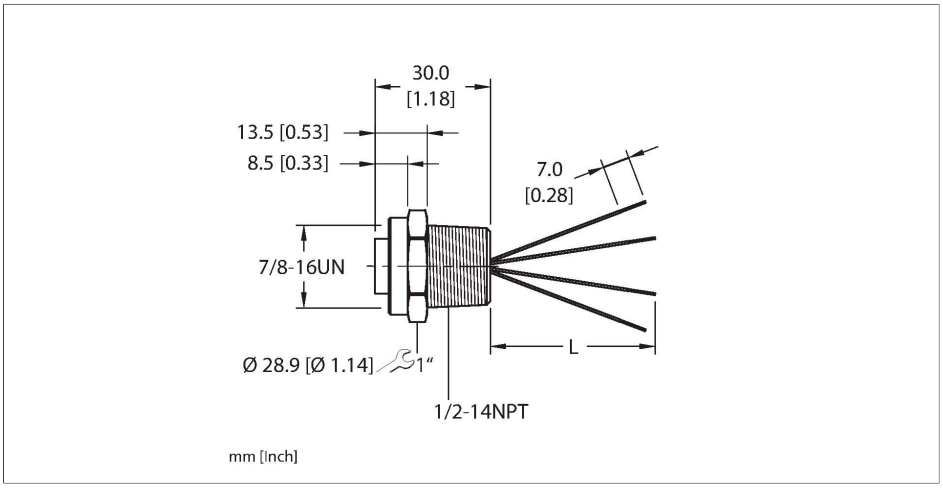

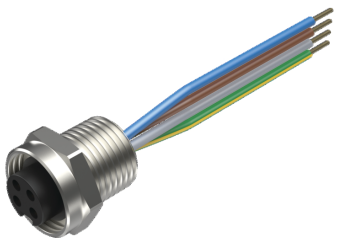

Technical data

Type	P-RKFV 40D-1/14.5/NPT
ID	U0976-86
Connector A	Female, 7/8"-16 UN
Number of contacts	4
Contacts	Brass, CuZn, Gold-plated
Contact carriers	Plastic, TPU, Black
Housing material/finish	Stainless Steel, 1.4401 (AISI 316), Passivated
Tightening torque	2 Nm
Mounting orientation	Front mount
Mounting thread	1/2"-14 NPT
Receptacle mounting torque	3.5…10.2 Nm
Mechanical life	> 100 Mating cycles
Pollution degree	3
Protection class (When coupled)	IP67, IP68, IP69, IP69K
	NEMA: 1, 3, 4, 4X, 6P, 12
Total number of conductors	4
Length (L)	1 m
Conductor material	TC (tinned copper)
Conductor insulation material	PVC
Conductor size	18 AWG [Similar to 0.75 mm²]
Conductor colors	BU, BN, GY, GNYE
Electrical properties at +20 °C	
Rated voltage	600 V

Features

IP67/IP68
IP69/IP69K
DEGREE OF PROTECTION

- 7/8" minifast, Female, Receptacle, 4-pin
- Mounting thread: 1/2"-14 NPT

Contact assignment

Connector A

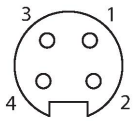

Circuit Diagram



P-RKFV 40D-1/14.5/NPT| 01/14/2026 17-45 | technical changes reserved

Technical data

Current	9 A
Mechanical and chemical properties	
Ambient temperature range (static)	-40…+105 °C
Approvals	UL 2238 UL Div. 2 FM Div.2 CSA Div. 2 CSA C22.2 No. 182.3 CE RoHS
Note	
	- CAUTION: RISK OF ELECTRICAL SHOCK. DO NOT DISCONNECT UNDER LOAD.
	- We reserve the right to make technical alterations without prior notice.

Front panel mounting

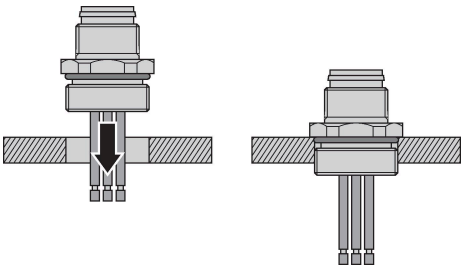

P-RKFV 40D-1/14.5/NPT| 01/14/2026 17-45 | technical changes reserved