RSM RKM 50-2M/S90-SP
Supply Cable/Power Cable – Extension Cable

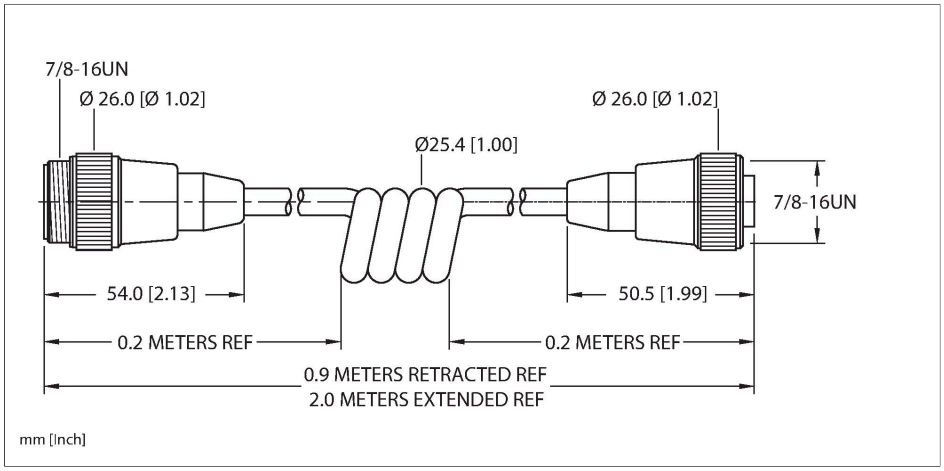

Features

- 7/8" minifast male connector, straight
- 7/8" minifast female connector, straight
- IP67
-
- 7/8” Male, Straight, 5-pin
- 7/8" Female, Straight, 5-pin
- General Purpose Cable
- Yellow TPU jacket, 5X18 AWG

Technical data

Type	RSM RKM 50-2M/S90-SP
ID	U2-06364
Special version	S90-SP = TPU cable jacket - coil cable
Connector A	Male, 7/8"-16 UN, Straight
Number of contacts	5
Contacts	Brass, CuZn, Gold-plated
Contact carriers	Plastic, TPU, Yellow
Connector body	Plastic, TPU, Yellow
Coupling nut	Brass, CuZn, Nickel-plated
Tightening torque	2 Nm
Mechanical life	> 100 Mating cycles
Pollution degree	3
Protection class (When coupled)	IP67, IP68, IP69, IP69K
	NEMA: 1, 3, 4, 6P, 12
Connector B	Female, 7/8"-16 UN, Straight
Number of contacts	5
Contacts	Brass, CuZn, Gold-plated
Contact carriers	Plastic, TPU, Yellow
Connector body	Plastic, TPU, Yellow
Coupling nut	Brass, CuZn, Nickel-plated
Tightening torque	2 Nm
Mechanical life	> 100 Mating cycles
Pollution degree	3
Protection class (When coupled)	IP67, IP68, IP69, IP69K

Cable cross section

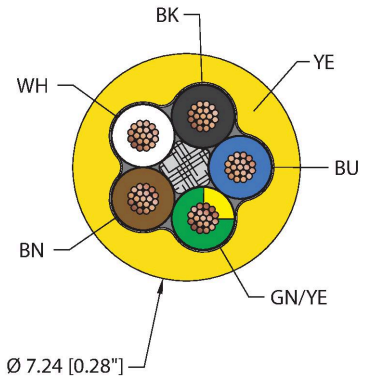

Contact assignment

Connector A

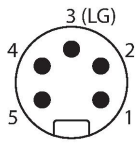

Connector B

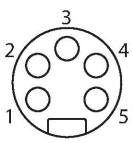

Technical data

	NEMA: 1, 3, 4, 6P, 12
Cable data	
Total number of conductors	5
Cable diameter	Ø 7.24 mm
Length (L)	2 m, (+50mm or 4% of length/-0.0, Whichever is greater)
Cable jacket	TPU, Yellow
Conductor material	TC (tinned copper)
Conductor insulation material	PVC
Conductor size	5 x 18 AWG [Similar to 0.75 mm²]
Number of strands x O.D.	19 x 0.0092 "
Conductor colors	BK, BU, GN/YE, BN, WH
Electrical properties at +20 °C	
Rated voltage	600 V
Current	9 A
Mechanical and chemical properties	
Bending radius (static)	≥ 5 x Ø
Bending radius (dynamic)	≥ 10 x Ø
Approval	
Approvals	UL 2238 CSA C22.2 No. 182.3 CE UKCA RoHS
Note	
	- Flex ratings may be reduced if used in extreme temperatures, exposure to certain chemicals, operating above the rated cycle speed, or operating below the rated cable bend radius.
	- We reserve the right to make technical alterations without prior notice.

RSM RKM 50-2M/S90-SP| 03/27/2025 21-19 | technical changes reserved